Approved in Open Session
10/13/26
Manatee County Port Authority

October 13, 2026

REGULAR
AGENDA ITEM 7 : CSX CONSTRUCTION AGREEMENT AND ADOPT BUDGET RESOLUTION PA-27-03

BACKGROUND:

The Authority has approved various vendors to support roadway improvements on South Dock Street to include roadway reconstruction and striping and upgrading of the existing asphalt and rubber crossing surface with concrete panels at the mainline railroad. This grant is 100% funded by Florida Department of Commerce in the amount of $2,000,000.

Approval is requested to execute the contract for the CSX Transportation, Inc. Construction Agreement in the amount of $274,671.00 to support project completion. In addition, the budget resolution approves $195,000 for additional expenses for the project to fund railroad improvements and railroad crossing surface replacement.

ATTACHMENT:

- CSX Transportation, Inc. Construction Agreement and Email
- Budget Resolution PA-27-03

COST AND FUNDING SOURCE:
Previously Budgeted Florida Department of Commerce Grant
$195,000.00 Port Cash

CONSEQUENCES IF DEFERRED:
Loss of funding for the South Dock Street Project if it is not completed by December 31, 2026.

LEGAL COUNSEL REVIEW: Yes

RECOMMENDATION:

- Move to approve and authorize the Chairman to execute the contracts between the Manatee County Port Authority and CSX Transportation, Inc. for $274,671.00 for the South Dock Street project.
- Move to adopt Budget Resolution PA-27-03.

RESOLUTION PA-27-03
AMENDING THE ANNUAL BUDGET
FOR MANATEE COUNTY PORT AUTHORITY
FOR FISCAL YEAR 2026-2027

WHEREAS, Sections 129.06 and 180.016, Florida Statutes, authorizes the Manatee County Port Authority to amend its budget for the current fiscal year as follows:

a) Appropriations for expenditures in any fund may be decreased and other appropriations in the same fund correspondingly increased, provided the total appropriations of the fund are not changed.

b) Appropriations from reserves may be made to increase the appropriation for any particular expense in the same fund, or to create an appropriation in the fund for any lawful purpose.

c) Unanticipated revenues, including increased receipts for enterprise or propriety funds, may be appropriated for their intended purpose, and may be transferred between funds to properly account for the unanticipated revenue.

NOW, THEREFORE, BE IT RESOLVED by the Manatee County Port Authority that the 2026-2027 budget is hereby amended in accordance with Section 129.06 and 180.016, Florida Statutes as described on the attached summary and specified in the budget adjustment batch files which are listed below:

Item No.	Batch ID No.	Reference No.
1	BAAL103126B	BU27000004

ADOPTED with a quorum present and voting this on the 13th day of October 2026.

ATTEST: ANGELINA M. COLONNESO
CLERK OF CIRCUIT COURT

By: Robin Tuck DC

MANATEE COUNTY PORT AUTHORITY

PORT AUTHORITY SEAL MANATEE CO. FLA.

BUDGET AMENDMENT RESOLUTION NO. PA-27-03
AGENDA DATE: October 13, 2026

1) Fund: Port Cash

Section: Roadway Repaving South Dock Street

Description: Budgets an additional $195,000 to support roadway improvements and replacement of the railroad crossing surface.

Batch ID: BAAL101326B Reference: BU27000004

CONSTRUCTION AGREEMENT

This Construction Agreement ("**Agreement**") is made as of _____, 20____, by and between CSX TRANSPORTATION, INC., a Virginia corporation with its principal place of business in Jacksonville, Florida ("**CSXT**"), and MANATEE COUNTY PORT AUTHORITY, a body corporate and political subdivision of the State of Florida ("Agency").

EXPLANATORY STATEMENT

1. Agency has proposed to construct, or to cause to be constructed, roadway improvements at South Dock Street which includes roadway reconstruction and striping, and upgrading the existing asphalt and rubber crossing surface with concrete panels for the mainline crossing with Department of Transportation Crossing Inventory Number 621516J, Railroad Milepost Number AZA 906.62, located within the Florida Division, Palmetto Subdivision, in Palmetto, Manatee County, Florida (the "**Project**").

2. Agency has obtained, or will obtain, all authorizations, permits and approvals from all local, state and federal agencies (including Agency), and their respective governing bodies and regulatory agencies, necessary to proceed with the Project and to appropriate all funds necessary to construct the Project.

3. Agency acknowledges that: (i) by entering into this Agreement, CSXT will provide services and accommodations to promote public interest in this Project, without profit or other economic inducement typical of other Agency contractors; (ii) neither CSXT nor its affiliates (including their respective directors, officers, employees or agents) will incur any costs, expenses, losses or liabilities in excess of payments made to CSXT, by or on behalf of Agency or its contractors, pursuant to this Agreement; and (iii) CSXT retains the paramount right to regulate all activities affecting its property and operations.

4. It is the purpose of this Agreement to provide for the terms and conditions upon which the Project may proceed.

NOW, THEREFORE, in consideration of the foregoing Explanatory Statement and other good and valuable consideration, the receipt and sufficiency of which are acknowledged by the parties, the parties agree as follows:

1. Project Plans and Specifications

   1.1 Preparation and Approval. Pursuant to Exhibit A of this Agreement, all plans, specifications, drawings and other documents necessary or appropriate to the design and construction of the Project shall be prepared, at Agency's sole cost and expense, by Agency or CSXT or their respective contractors. Project plans, specifications and drawings prepared by or on behalf of Agency shall be subject, at CSXT's election, to the review and approval of CSXT. Such plans, specifications and drawings, as

prepared or approved by CSXT, are referred to as the "**Plans**", and shall be incorporated and deemed a part of this Agreement. Plans prepared or submitted to and approved by CSXT as of the date of this Agreement are set forth in Exhibit B to this Agreement.

1.2 Effect of CSXT Approval or Preparation of Plans. By its review, approval or preparation of Plans pursuant to this Agreement, CSXT signifies only that such Plans and improvements constructed in accordance with such Plans satisfy CSXT's requirements. CSXT expressly disclaims all other representations and warranties in connection with the Plans, including, but not limited to, the integrity, suitability or fitness for the purposes of Agency or any other persons of the Plans or improvements constructed in accordance with the Plans. Nothing contained herein shall be construed as a waiver of the Parties' duty of good faith and fair dealings.

1.3 Compliance with Plans. The Project shall be constructed in accordance with the Plans.

2. Allocation and Conduct of Work

Work in connection with the Project shall be allocated and conducted as follows:

2.1 CSXT Work. Subject to timely payment of Reimbursable Expenses as provided by Section 4, CSXT shall provide, or cause to be provided, the services as set forth by Exhibit A to this Agreement. Agency agrees that CSXT shall provide all services that CSXT deems necessary or appropriate (whether or not specified by Exhibit A) to preserve and maintain its property and operations, without impairment or exposure to liability of any kind and in compliance with all applicable federal, state and local regulations and CSXT's contractual obligations, including, but not limited to, CSXT's existing or proposed third party agreements and collective bargaining agreements.

2.2 Agency Work. Agency shall perform, or cause to be performed, all work as set forth by Exhibit A, at Agency's sole cost and expense.

2.3 Conduct of Work. CSXT shall commence its work under this Agreement following: (i) delivery to CSXT of a notice to proceed from Agency; (ii) payment of Reimbursable Expenses (as provided by Section 4.1) as required by CSXT prior to the commencement of work by CSXT; (iii) issuance of all permits, approvals and authorizations necessary or appropriate for such work; and (iv) delivery of proof of insurance acceptable to CSXT, as required by Section 9. The initiation of any services by CSXT pursuant to this Agreement, including, but not limited to, the issuance of purchase orders or bids for materials or services, shall constitute commencement of work for the purposes of this Section. The parties intend that all work by CSXT or on CSXT property shall conclude no later than **one (1) year from the Agreement date**, unless the parties mutually agree to extend such date.

3. Special Provisions. Agency shall observe and abide by, and shall require its contractors ("**Contractors**") to observe and abide by the terms, conditions and provisions set forth in Exhibit C to this Agreement (the "Special Provisions"). To the extent that Agency performs Project work itself, Agency shall be deemed a Contractor for purposes of this Agreement. Agency further agrees that, prior to the commencement of Project work by any third party Contractor, such Contractor shall execute and deliver to CSXT Schedule I to this Agreement to acknowledge Contractor's agreement to observe and abide by the terms and conditions of this Agreement.

4. Cost of Project and Reimbursement Procedures

4.1 Reimbursable Expenses. Agency shall reimburse CSXT for all costs and expenses incurred by CSXT in connection with the Project, including, without limitation: (1) all out of pocket expenses, (2) travel and lodging expenses, (3) telephone, facsimile, and mailing expenses, (4) costs for equipment, tools, materials and supplies, (5) sums paid to CSXT's consultants and subcontractors, and (6) CSXT labor in connection with the Project, together with CSXT labor overhead percentages established by CSXT pursuant to applicable law (collectively, "**Reimbursable Expenses**"). Reimbursable Expenses shall also include expenses incurred by CSXT prior to the date of this Agreement to the extent identified by the Estimate provided pursuant to Section 4.2.

4.2 Estimate. CSXT has estimated the total Reimbursable Expenses for the Project as shown on Exhibit D (the "**Estimate**", as amended or revised). In the event CSXT anticipates that actual Reimbursable Expenses for the Project may exceed such Estimate, it shall provide Agency with the revised Estimate of the total Reimbursable Expenses, together with a revised Payment Schedule (as defined by Section 4.3.1), for Agency's approval and confirmation that sufficient funds have been appropriated to cover the total Reimbursable Expenses of such revised Estimate. CSXT may elect, by delivery of notice to Agency, to immediately cease all further work on the Project, unless and until Agency provides such approval and confirmation. Furthermore, the Agency acknowledges and understands that any estimated cost to construct the project shall only be good for a limited period of time and that any delays to move to construction, if CSXT agrees to such construction, shall result in increased costs.

4.3 Payment Terms.

4.3.1 Agency shall pay CSXT for Reimbursable Expenses in the amounts and on the dates set forth in the Payment Schedule as shown on Exhibit E (the "Payment Schedule", as revised pursuant to Section 4.2). CSXT agrees to submit invoices to Agency for such amounts and Agency shall remit payment to CSXT at the later of thirty (30) days following delivery of each such invoice to Agency or, the payment date (if any) set forth in the Payment Schedule.

4.3.2 Following completion of the Project, CSXT shall submit to Agency a final invoice that reconciles the total Reimbursable Expenses incurred by CSXT

against the total payments received from Agency. Agency shall pay to CSXT the amount by which Reimbursable Expenses exceed total payments as shown by the final invoice, which shall be submitted in accordance with the Local Government Prompt Payment Act, sections 218.70 through 218.80, Florida Statutes. All payments shall be due on the date established by the Local Government Prompt Payment Act. Payment due date for purchase of goods or services other than construction services is net forty-five (45) days from the date an invoice submitted in accordance with the Local Government Prompt Payment Act is received by the Agency. In the event of a disputed invoice, only that portion so contested will be withheld from payment and the undisputed portion shall be due and payable on the terms set forth herein. The Agency does not pay sales tax and will provide sales tax exemption information at the written request of CSXT, where necessary. In the event that the payments received by CSXT from Agency exceed the Reimbursable Expenses, CSXT shall remit such excess to Agency.

4.3.3 In the event that Agency fails to pay CSXT any sums due CSXT under this Agreement: (i) Agency shall pay CSXT interest at the lesser of 1.0% per month or the maximum rate of interest permitted by applicable law on the delinquent amount until paid in full; and (ii) CSXT may elect, by delivery of notice to Agency: (A) to immediately cease all further work on the Project, unless and until Agency pays the entire delinquent sum, together with accrued interest; and/or (B) to terminate this Agreement.

4.3.4 All invoices from CSXT shall be delivered to Agency in accordance with Section 16 of this Agreement. All payments by Agency to CSXT shall be made by certified check and mailed to the following address or such other address as designated by CSXT's notice to Agency:

CSX Transportation, Inc.
P.O. Box 530192
Atlanta, GA 30353-0192

4.4 Effect of Termination. Agency's obligation to pay to CSXT Reimbursable Expenses in accordance with Section 4 shall survive termination of this Agreement for any reason.

5. Appropriations Agency represents to CSXT that: (i) Agency has appropriated funds sufficient to reimburse CSXT for the Reimbursable Expenses encompassed by the Estimate attached as Exhibit D; (ii) Agency shall use its best efforts to obtain appropriations necessary to cover Reimbursable Expenses encompassed by subsequent Estimates approved by Agency; and (iii) in the event the Agency, in its sole discretion, determines that sufficient budgeted funds are not available to appropriate for payments due to CSXT under this Agreement, the Agency shall notify Contractor of such occurrence and this Agreement shall terminate on the last day of the current fiscal period without any penalty or expense to the Agency.

6. Easements and Licenses

6.1 Agency Obligation. Agency shall acquire all necessary licenses, permits and easements required for the Project.

6.2 Temporary Construction Licenses. Insofar as it has the right to do so, CSXT hereby grants Agency a nonexclusive license to access and cross CSXT's property, to the extent necessary for the construction of the Project (excluding ingress or egress over public grade crossings), along such routes and upon such terms as may be defined and imposed by CSXT and such temporary construction easements as may be designated on the Plans approved by CSXT.

6.3 Reserved.

6.4 Maintenance Agreement. Contemporaneous with the execution of this Agreement, CSXT and Agency have executed that certain Maintenance Agreement providing for Agency's ongoing use, maintenance, repair, renewal and removal of the Project.

6.5 Permanent Easements. Insofar as it has the right to do so, CSXT shall grant, without warranty to Agency, easements for the use and maintenance (in accordance with the provisions of the Maintenance Agreement described in 6.4) of the Project wholly or partly on CSXT property as shown on the Plans approved by CSXT, if any, on terms and conditions. Upon request by CSXT, Agency shall furnish to CSXT descriptions and plat plans for the easements.

7. Permits At its sole cost and expense, Agency shall procure all permits and approvals required by any federal, state, or local governments or governmental agencies for the construction, maintenance and use of the Project, copies of which shall be provided to CSXT.

8. Termination

8.1 By Agency. For any reason, Agency may, as its sole remedy, terminate this Agreement by delivery of notice to CSXT. Agency shall not be entitled to otherwise pursue claims for consequential, direct, indirect or incidental damages or lost profits as a consequence of CSXT's default or termination of this Agreement or Work on the Project by either party.

8.2 By CSXT. In addition to the other rights and remedies available to CSXT under this Agreement, CSXT may terminate this Agreement by delivery of notice to Agency in the event Agency or its Contractors fail to observe the terms or conditions of this Agreement and such failure continues more than ten (10) business days following delivery of notice of such failure by CSXT to Agency.

8.3 Consequences of Termination. If the Agreement is terminated by either party pursuant to this Section or any other provision of this Agreement, the parties understand that it

may be impractical for them to immediately stop the Work. Accordingly, they agree that, in such instance a party may continue to perform Work until it has reached a point where it may reasonably and safely suspend the Work. Agency shall reimburse CSXT pursuant to this Agreement for the Work performed, plus all costs reasonably incurred by CSXT to discontinue the Work and protect the Work upon full suspension of the same, the cost of returning CSXT's property to its former condition, and all other costs of CSXT incurred as a result of the Project up to the time of full suspension of the Work. Termination of this Agreement or Work on the Project, for any reason, shall not diminish or reduce Agency's obligation to pay CSXT for Reimbursable Expenses incurred in accordance with this Agreement. In the event of the termination of this Agreement or the Work for any reason, CSXT's only remaining obligation to Agency shall be to refund to Agency payments made to CSXT in excess of Reimbursable Expenses in accordance with Section 4.

9. Insurance In addition to the insurance that Agency requires of its Contractor, Agency shall acquire or require its Contractor to purchase and maintain insurance in compliance with CSXT's insurance requirements attached to this Agreement as Exhibit F. Neither Agency nor Contractor shall commence work on the Project until such policy or policies have been submitted to and approved by CSXT's Risk Management Department.

10. Ownership and Maintenance

10.1 By Agency. Agency shall maintain and repair, at its sole cost and expense, all parts comprising the permanent aspects of the Project, as shown by the Plans, consisting of roadway pavement up to the outer ends of the railroad cross ties, sidewalks, guardrails, and curbs, in good and safe condition to CSXT's satisfaction. In the event Agency fails to do so after reasonable notice from CSXT (unless an emergency condition exists or is imminent in the opinion of CSXT that requires immediate action), CSXT may perform such maintenance and repair, at Agency's sole cost and expense.

10.2 By CSXT. CSXT shall maintain and repair the crossing surface between the ends of its cross ties and its signal facilities at the crossing, at Agency's sole cost and expense.

10.3 Alterations. Agency shall not undertake any alteration, modification or expansion of the Project, without the prior written approval of CSXT, which may be withheld for any reason, and the execution of such agreements as CSXT may require. CSXT may undertake alterations of its property, track or facilities and shall be reimbursed by Agency for the expenses incurred by CSXT with respect to the removal and restoration of the crossing in connections with such alteration.

11. Indemnification

11.1 Generally. To the maximum extent permitted by applicable law, Agency's Contractors shall indemnify, defend, and hold CSXT and its affiliates harmless from and against all claims, demands, payments, suits, actions, judgments, settlements, and damages of

every nature, degree, and kind (including direct, indirect, consequential, incidental, and punitive damages), for any injury to or death to any person(s) (including, but not limited to the employees of CSXT, its affiliates, Agency or its Contractors), for the loss of or damage to any property whatsoever (including but not limited to property owned by or in the care, custody, or control of CSXT, its affiliates, Agency or its Contractors, and environmental damages and any related remediation brought or recovered against CSXT and its affiliates), arising directly or indirectly from the negligence, recklessness or intentional wrongful misconduct of the Agency's Contractors and its respective agents, employees, invitees, contractors, or its contractors' agents, employees or invitees in the performance of work in connection with the Project or activities incidental thereto, or from their presence on or about CSXT's property. The foregoing indemnification obligation shall not be limited to the insurance coverage required by this Agreement, except to the extent required by law or otherwise expressly provided by this Agreement.

11.2 Compliance with Laws. Agency shall comply, and shall require its Contractors to comply, with any federal, state, or local laws, statutes, codes, ordinances, rules, and regulations applicable to its construction and maintenance of the Project. Agency's Contractors shall indemnify, defend, and hold CSXT and its affiliates harmless with respect to any fines, penalties, liabilities, or other consequences arising from breaches of this Section.

11.3 "CSXT Affiliates". For the purpose of this Section 11, CSXT's affiliates include CSX Corporation and all entities, directly or indirectly, owned or controlled by or under common control of CSXT or CSX Corporation and their respective officers, directors, employees and agents.

11.4 Notice of Incidents. Agency and its Contractor shall notify CSXT promptly of any loss, damage, injury or death arising out of or in connection with the Project work.

11.5 Survival. The provisions of this Section 11 shall survive the termination or expiration of this Agreement.

12. Independent Contractor The parties agree that neither Agency nor its Contractors shall be deemed either agents or independent contractors of CSXT. Except as otherwise provided by this Agreement, CSXT shall exercise no control whatsoever over the employment, discharge, compensation of, or services rendered by Agency or Agency's Contractors, or the construction practices, procedures, and professional judgment employed by Agency or its Contractor to complete the Project. Notwithstanding the foregoing, this Section 12 shall in no way affect the absolute authority of CSXT to prohibit Agency or its Contractors or anyone from entering CSXT's property, or to require the removal of any person from its property, if it determines, in its sole discretion, that such person is not acting in a safe manner or that actual or potential hazards in, on or about the Project exist.

13. "Entire Agreement" This Agreement embodies the entire understanding of the parties, may not be waived or modified except in a writing signed by authorized representatives of both parties, and supersedes all prior or contemporaneous written or oral understandings, agreements or negotiations regarding its subject matter. In the event of any inconsistency between this Agreement and the Exhibits, the more specific terms of the Exhibits shall be deemed controlling.

14. Waiver If either party fails to enforce its respective rights under this Agreement, or fails to insist upon the performance of the other party's obligations hereunder, such failure shall not be construed as a permanent waiver of any rights or obligations in this Agreement.

15. Assignment CSXT may assign this Agreement and all rights and obligations herein to a successor in interest, parent company, affiliate, or future affiliate. Upon assignment of this Agreement by CSXT and the assumption of CSXT's assignee of CSXT's obligations under this Agreement, CSXT shall have no further obligation under this Agreement. Agency shall not assign its rights or obligations under this Agreement without CSXT's prior consent, which consent may be withheld for any reason.

16. Notices All notices, consents and approvals required or permitted by this Agreement shall be in writing and shall be deemed delivered upon personal delivery, upon the expiration of three (3) days following mailing by first class U.S. mail, or upon the next business day following mailing by a nationally recognized overnight carrier, to the parties at the addresses set forth below, or such other addresses as either party may designate by delivery of prior notice to the other party:

If to CSXT:	CSX Transportation, Inc. 500 Water Street, J-301 Jacksonville, Florida 32202 Attention: Director Project Management – Public Projects
If to Agency:	Manatee County, Florida Port Authority 300 Tampa Bay Way, Suite One (1) Palmetto, Florida 34221 Attention: John D. Glass, Jr., P.E.

17. Severability The parties agree that if any part, term or provision of this Agreement is held to be illegal, unenforceable or in conflict with any applicable federal, state, or local law or regulation, such part, term or provision shall be severable, with the remainder of the Agreement remaining valid and enforceable.

18. Applicable Law This Agreement shall be governed by the laws of the State of Florida, exclusive of its choice of law rules. The parties further agree that the venue of all legal and equitable proceedings related to disputes under this Agreement shall be situated in Duval County, Florida, and the parties agree to submit to the personal jurisdiction of any State or Federal court situated in Duval County, Florida.

19. By executing this Agreement and each and every renewal hereof (if renewal is separately provided for herein), pursuant to section 287.135, Florida Statutes, CSXT certifies, represents, and warrants that: (a) it is not on the Scrutinized Companies with Activities in Sudan List, (b) it is not on the Scrutinized Companies with Activities in the Iran Petroleum Energy Sector List, (c) it is not on the Scrutinized Companies with Activities in Iran Terrorism Sectors List, (d) that it does not have Business operations or is engaged in business in Cuba or Syria, and (e) that it is not engaged or engaging in a Boycott of Israel, and that all such certifications were true at the time it submitted its bid or proposal for this Agreement, as of the Effective Date of this Agreement, and as of the effective date of any renewal of this Agreement. Notwithstanding anything contained in this Agreement to the contrary, the Agency may terminate this Agreement immediately for cause if: (1) CSXT is found to have submitted a false certification regarding (a) – (e) above in accordance with section 287.135(5), Florida Statutes, (2) CSXT is found to have been placed on the Scrutinized Companies with Activities in Sudan List or the Scrutinized Companies with Activities in the Iran Petroleum Energy Sector List, or is or has been engaged in Business operations in Cuba or Syria or a Boycott of Israel, or (3) CSXT is found to have been placed on a list created pursuant to section 215.473, Florida Statutes, relating to scrutinized active business operations in Iran. Such termination shall be in addition to any and all remedies available to the Agency at law or in equity. The terms "Boycott of Israel" and "Business operations" used in this section are defined as in Section 287.135, Florida Statutes. The Lists referred to in this section are those Lists in and maintained pursuant to section 287.135, Florida Statutes.

20. By executing this Agreement and each and every renewal hereof (if renewal is provided for herein), pursuant to section 943.03102, Florida Statutes, CSXT certifies, represents, and warrants that it has not been designated as a domestic terrorist organization or as a foreign terrorist organization and that such certification is true as of the time CSXT executed this Agreement and as of the effective date of any renewal. Notwithstanding anything contained in this Agreement, the Agency may terminate the Agreement immediately for cause if: (i) CSXT is found to have submitted a false certification or (ii) CSXT has been designated as a domestic terrorist organization or as a foreign terrorist organization. Such termination shall be in addition to any and all remedies available to the Agency at law or in equity.

21. By entering into this Agreement, pursuant to section 377.816, Florida Statutes, CSXT certifies, represents, and warrants that it will not use any funds paid by the Agency in support of a "net zero policy," as that term is defined in section 377.816, Florida Statutes, or in any other manner prohibited by that statute. Notwithstanding anything contained in this solicitation to the contrary, the Agency may terminate the Agreement immediately for cause if CSXT is found to have submitted a false certification. Such termination shall be in addition to any and all remedies available to the Agency at law or in equity.

22. Pursuant to section 286.101, Florida Statutes, CSXT shall disclose any current or prior interest of, any contract with, or any grant or gift received from a Foreign Country of Concern, as defined below, if such interest, contract, or grant or gift has a value of $50,000 or

more and such interest existed at any time or such contract or grant or gift was received or in force at any time during the previous five (5) years.

23. For purposes of this section, "Foreign Country of Concern" means the People's Republic of China, the Russian Federation, the Islamic Republic of Iran, the Democratic People's Republic of Korea, the Republic of Cuba, the Venezuelan regime of Nicolas Maduro, or the Syrian Arab Republic, including any agency of or any other entity under significant control of such foreign country of concern.

24. CSXT's disclosure shall include the name and mailing address of the disclosing entity, the amount of the contract or grant or gift or the value of the interest disclosed, the applicable foreign country of concern and, if applicable, the date of termination of the contract or interest, the date of receipt of the grant or gift, and the name of the agent or controlled entity that is the source or interest holder. CSXT represents that within one (1) year before proposing any contract to the Agency, CSXT provided a copy of such disclosure to the Florida Department of Financial Services.

25. CSXT shall comply with all applicable provisions of sections 448.09 and 448.095, Florida Statutes, as may be amended. The definitions in section 448.095(1), Florida Statutes, as may be amended, apply to this section of the Agreement. CSXT shall register with and use the U.S. Department of Homeland Security's E-Verify system to verify the work authorization status of all employees of CSXT. CSXT may not enter into a contract with a subcontractor to perform work under this Agreement unless and until the subcontractor registers with and uses the E-Verify system. If CSXT enters into a contract with a subcontractor to perform work under this Agreement, CSXT must obtain a properly executed affidavit from the subcontractor stating that the subcontractor does not employ, contract with, or subcontract with an unauthorized alien. CSXT must maintain copies of all such affidavits for the duration of this Agreement. Agency may terminate this Agreement for cause if Agency determines that CSXT or CSXT's subcontractor has not complied with any applicable provision of sections 448.09 or 448.095, Florida Statutes, as may be amended. Agency will terminate this Agreement for cause if Agency has a good faith belief that CSXT has knowingly violated subsection 448.09(1), Florida Statutes, as may be amended. If the Agency has a good faith belief that a subcontractor knowingly violated section 448.09(1), Florida Statutes, as may be amended, but Agency determines that CSXT otherwise complied with section 448.09(1), Florida Statutes, as may be amended, Agency will notify CSXT as such, and CSXT must immediately terminate CSXT's contract with said subcontractor . If this Agreement is terminated under section 448.095(c), F.S.: (a) such termination is not a breach of this Agreement and may not be considered as such; (b) CSXT may not be awarded a public contract for at least 1 year after the date on which the Agreement is terminated; and (c) CSXT is liable for any additional costs incurred by the Agency as a result of the termination of the Agreement.

26. CSXT agrees that CSXT does not and will not, nor will it allow a subcontractor to, use any funds from the Agency for the purpose of issuing an identification card or document to any individual who does not provide proof of lawful presence in the United States.

27. Pursuant to section 119.0701, Florida Statutes, for any tasks performed by CSXT on behalf of the Agency, CSXT shall: (a) keep and maintain all public records, as that term is defined in chapter 119, Florida Statutes ("Public Records"), required by the Agency to perform the work contemplated by this Agreement; (b) upon request from the Agency's custodian of public records, provide the Agency with a copy of the requested Public Records or allow the Public Records to be inspected or copied within a reasonable time at a cost that does not exceed the costs provided in chapter 119, Florida Statutes, or as otherwise provided by law; (c) ensure that Public Records that are exempt or confidential and exempt from Public Records disclosure requirements are not disclosed except as authorized by law for the duration of the term of this Agreement and following completion or termination of this Agreement, if CSXT does not transfer the records to the Agency in accordance with (d) below; and (d) upon completion or termination of this Agreement, (i) if the Agency, in its sole and absolute discretion, requests that all Public Records in possession of CSXT be transferred to the Agency, CSXT shall transfer, at no cost, to the Agency, all Public Records in possession of CSXT within thirty (30) days of such request or (ii) if no such request is made by the Agency, CSXT shall keep and maintain the Public Records required by the Agency to perform the work contemplated by this Agreement. If CSXT transfers all Public Records to the Agency pursuant to (d)(i) above, CSXT shall destroy any duplicate Public Records that are exempt or confidential and exempt from Public Records disclosure requirements within thirty (30) days of transferring the Public Records to the Agency and provide the Agency with written confirmation that such records have been destroyed within thirty (30) days of transferring the Public Records. If CSXT keeps and maintains Public Records pursuant to (d)(ii) above, CSXT shall meet all applicable requirements for retaining Public Records. All Public Records stored electronically must be provided to the Agency, upon request from the Agency's custodian of public records, in a format that is compatible with the information technology of the Agency. If CSXT does not comply with a Public Records request, or does not comply with a Public Records request within a reasonable amount of time, the Agency may pursue any and all remedies available in law or equity including, but not limited to, specific performance. The provisions of this section only apply to those tasks in which CSXT is acting on behalf of the Agency.

    IF THE CSXT HAS QUESTIONS REGARDING THE APPLICATION OF CHAPTER 119, FLORIDA STATUTES, TO THE CSXT'S DUTY TO PROVIDE PUBLIC RECORDS RELATING TO THIS AGREEMENT, CONTACT THE CUSTODIAN OF PUBLIC RECORDS AT:

    TELEPHONE NUMBER: 941-722-6621
    E-MAIL ADDRESS: RECORDSCUSTODIAN@SEAPORTMANATEE.ORG
    MAILING ADDRESS: _ATTN: RECORDS CUSTODIAN, 300 TAMPA BAY WAY, SUITE ONE, PALMETTO, FL 34221

28. In its design and/or administration of any "public works project" on behalf of the Agency, CSXT will comply with the requirements of section 255.0993, Florida Statutes. As used in this clause, "public works project" means activity paid for with any State of Florida funds

administered by the Agency which consists of the construction, maintenance, repair, renovation, remodeling, or improvement of a building, road, street, sewer, storm drain, water system, site development, irrigation system, reclamation project, gas or electrical distribution system, gas or electrical substation, or other facility, project, or portion thereof owned in whole or in part by any governmental entity. Technical specifications prepared by the Engineer, or anyone under its control, will comply with the requirements of section 255.0993, Florida Statutes. Such requirements may apply either to construction of the public works project or to purchase of materials for the public works project. The requirements pertain to domestic production of iron and steel. CSXT will exercise its professional judgment to determine whether and how the requirements apply to a particular public works project. All specifications and other project documents prepared by the Engineer will comply with section 255.0993, Florida Statutes.

REMINDER OF THE PAGE LEFT INTENTIONALLY BLANK

BY SIGNING THIS AGREEMENT, I certify that there have been no changes made to the content of this Agreement since its approval by the CSXT Legal Department on **August 4, 2026.**

IN WITNESS WHEREOF, the parties have caused this Agreement to be executed in duplicate, each by its duly authorized officers, as of the date of this Agreement.

MANATEE COUNTY, FLORIDA PORT AUTHORITY

By: _____

Name: Mike Rahn

Title: Chairman

10/13/26

ATTEST:

By: _____

Clerk of Court

ATTEST: MANATEE COUNTY
CLERK OF CIRCUIT COURT AND
COUNTY COMPTROLLER
BY: _____
DEPUTY CLERK

Reviewed and Approved:

_____

General Counsel

CSX TRANSPORTATION, INC.

By: _____

Tony C. Bellamy
Sr. Director Design & Construction

EXHIBIT A

ALLOCATION OF WORK

Subject to Section 2.1, work to be performed in connection with the Project is allocated as follows:

A. Agency shall let by contract to its Contractors:

1. Construction of all components as depicted in the plans under Exhibit B with the Agreement and includes but is not limited to all items listed under this exhibit.
2. Reconstruction of the two (2) lanes of traffic along South Dock Street approaching and within the CSXT right of way consisting of removal and replacement of the roadway grade and subgrade.
3. Paving up to the new concrete paneled crossing surface for mainline and up to the existing Tub-Platform crossing surface for the industry track, including in between both crossing surfaces, on both sides of the crossing at South Dock Street with Department of Transportation Crossing Inventory Number 621516J, Railroad Milepost Number AZA 906.62.
4. Overbuild the roadway profile approach on both sides of the crossing to meet CSXT Standard MWI 2521 having the new roadway profile at the same plane as the mainline and industrial track crossing surface within two feet (2'-0") outside the rails and having the roadway approaches not more than three inches (3") higher or lower than top of nearest rail at a point thirty feet (30-0") from rail, unless track superelevation dictates.
5. Overbuild the roadway profile between the mainline and industry tracks to smooth out the roadway approach.
6. Repave existing driveway located in the southeast quadrant relevant to the crossing partially within the CSXT right of way.
7. Perform all grading and sodding to accommodate roadway reconstruction of South Dock Street within and through the CSXT right of way.
8. Placement of all necessary signing and pavement markings, including the dynamic envelope.
9. Placement of erosion control devices as shown in the approved plans.
10. Design and implementation of all maintenance of traffic (MOT) and/or temporary traffic control plans and devices.
11. Restore the CSXT right of way to a condition that match the conditions prior to start of construction.
12. Remove all rubbish and debris from the project site.
13. All roadway work is to be done in accordance with Florida Department of Transportation Fiscal Year 2026-27 Standard Plans for

Road and Bridge Construction, and Florida Department of Transportation Fiscal Year 2026-27 Standard Specifications for Road and Bridge Construction.

B. CSXT shall perform or cause to be performed:

1. Preliminary engineering services.
2. Changes in communication and signal lines.
3. Flagging services and other protective services and devices as may be necessary.
4. Construction engineering and inspection to protect the interests of CSXT.
5. Removal of the existing asphalt and rubber interface crossing surface and installation of concrete panels on wood ties for the mainline at South Dock Street with Department of Transportation Crossing Inventory Number 621516J, Railroad Milepost Number AZA 906.62.
6. Construction and installation of rail, crossties, ballast, on-track materials, and other rail-related components to accommodate a new crossing surface for the mainline at South Dock Street with Department of Transportation Crossing Inventory Number 621516J, Railroad Milepost Number AZA 906.62.
7. Removal and disposal of railroad related waste materials; cleanup of the work site for the mainline at South Dock Street with Department of Transportation Crossing Inventory Number 621516J, Railroad Milepost Number AZA 906.62.
8. Existing crossing surface and rails for the industrial track to be left undisturbed.
9. All rail work performed by CSXT to be in accordance with CSXT MWI Standards.

REMINDER OF THE PAGE LEFT INTENTIONALLY BLANK

EXHIBIT B

PLANS AND SPECIFICATIONS

Plans, Specifications and Drawings:

As of the date of this Agreement, the following plans, specifications and drawings have been submitted by Agency to CSXT for its review and approval:

SHEET	DESCRIPTION	PREPARER	DATE
C1	Key Sheet	RS&H, Inc.	06/15/26
C2	Signature Sheet	RS&H, Inc.	06/15/26
C3 – C4	Summary of Pay Items	RS&H, Inc.	06/15/26
C5 – C7	Typical Section	RS&H, Inc.	06/15/26
C8	General Notes	RS&H, Inc.	06/15/26
C9 – C14	Roadway Plan	RS&H, Inc.	06/15/26
C15 – C20	Roadway Profile	RS&H, Inc.	06/15/26
C21 – C23	Grading Details	RS&H, Inc.	06/15/26
C24	Drainage Structures	RS&H, Inc.	06/15/26
C25 – C51	Cross Sections	RS&H, Inc.	06/15/26
C52 – C57	Erosion Control Plan	RS&H, Inc.	06/15/26
C58 – C72	Temporary Traffic Control Plan	RS&H, Inc.	06/15/26
C73	Tabulation of Quantities	RS&H, Inc.	06/15/26
C74 – C79	Signing and Pavement Marking Plan	RS&H, Inc.	06/15/26
C80	Special Details	RS&H, Inc.	06/15/26
N/A	Proposed Rail Material Sketch	Benesch	06/23/26

*Plans located at the end of the Agreement.

REMINDER OF THE PAGE LEFT INTENTIONALLY BLANK

EXHIBIT C

CSXT SPECIAL PROVISIONS

DEFINITIONS:

As used in these Special Provisions, all capitalized terms shall have the meanings ascribed to them by the Agreement, and the following terms shall have the meanings ascribed to them below:

"CSXT" shall mean CSX Transportation, Inc., its successors and assigns.

"CSXT Representative" shall mean the authorized representative of CSX Transportation, Inc.

"Agreement" shall mean the Agreement between CSXT and Agency dated as of _____, as amended, from time to time and agreed upon by both parties.

"Agency" shall mean the **MANATEE COUNTY, FLORIDA PORT AUTHORITY**.

"Agency Representative" shall mean the authorized representative of the **MANATEE COUNTY, FLORIDA PORT AUTHORITY**.

"Contractor" shall have the meaning ascribed to such term by the Agreement.

"Work" shall mean the Project as described in the Agreement.

I. AUTHORITY OF CSXT ENGINEER

The CSXT Representative shall have final authority in all matters affecting the safe maintenance of CSXT operations and CSXT property, and his or her approval shall be obtained by the Agency or its Contractor for methods of construction to avoid interference with CSXT operations and CSXT property and all other matters contemplated by the Agreement and these Special Provisions.

II. INTERFERENCE WITH CSXT OPERATIONS

A. Agency or its Contractor shall arrange and conduct its work so that there will be no interference with CSXT operations, including train, signal, telephone and telegraphic services, or damage to CSXT's property, or to poles, wires, and other facilities of tenants on CSXT's Property or right-of-way. Agency or its Contractor shall store materials so as to prevent trespassers from causing damage to trains, or CSXT Property. Whenever Work is likely to affect the operations or safety of trains, the method of doing such Work shall first be submitted to the CSXT Representative for approval, but such approval shall not relieve Agency or

its Contractor from liability in connection with such Work.

B. If conditions arising from or in connection with the Project require that immediate and unusual provisions be made to protect train operation or CSXT's property, Agency or its Contractor shall make such provision. If the CSXT Representative determines that such provision is insufficient, CSXT may, at the expense of Agency or its Contractor, require such provision as may be deemed necessary, or cause the Work to cease immediately.

III. NOTICE OF STARTING WORK. Agency or its Contractor shall not commence any work on CSXT Property or rights-of-way until it has complied with the following conditions:

A. Notify CSXT in writing of the date that it intends to commence Work on the Project. Such notice must be received by CSXT at least ten business days in advance of the date Agency or its Contractor proposes to begin Work on CSXT property. The notice must refer to this Agreement by date. If flagging service is required, such notice shall be submitted at least thirty (30) business days in advance of the date scheduled to commence the Work.

B. Obtain authorization from the CSXT Representative to begin Work on CSXT property, such authorization to include an outline of specific conditions with which it must comply.

C. Obtain from CSXT the names, addresses and telephone numbers of CSXT's personnel who must receive notice under provisions in the Agreement. Where more than one individual is designated, the area of responsibility of each shall be specified.

IV. WORK FOR THE BENEFIT OF THE CONTRACTOR

A. No temporary or permanent changes to wire lines or other facilities (other than third party fiber optic cable transmission systems) on CSXT property that are considered necessary to the Work are anticipated or shown on the Plans. If any such changes are, or become, necessary in the opinion of CSXT or Agency, such changes will be covered by appropriate revisions to the Plans and by preparation of a force account estimate. Such force account estimate may be initiated by either CSXT or Agency, but must be approved by both CSXT and Agency. Agency or Contractor shall be responsible for arranging for the relocation of the third party fiber optic cable transmission systems, at no cost or expense to CSXT.

B. Should Agency or Contractor desire any changes in addition to the above, then it shall make separate arrangements with CSXT for such changes to be accomplished at the Agency or Contractor's expense.

V. HAUL ACROSS RAILROAD

A. If Agency or Contractor desires access across CSXT property or tracks at other than an existing and open public road crossing in or incident to construction of the Project, the Agency or Contractor must first obtain the permission of CSXT and shall execute a license agreement or right of entry satisfactory to CSXT, wherein Agency or Contractor agrees to bear all costs and liabilities related to such access.

B. Agency and Contractor shall not cross CSXT's property and tracks with vehicles or equipment of any kind or character, except at such crossing or crossings as may be permitted pursuant to this section.

VI. COOPERATION AND DELAYS

A. Agency or Contractor shall arrange a schedule with CSXT for accomplishing stage construction involving work by CSXT. In arranging its schedule, Agency or Contractor shall ascertain, from CSXT, the lead time required for assembling crews and materials and shall make due allowance therefore.

B. Agency or Contractor may not charge any costs or submit any claims against CSXT for hindrance or delay caused by railroad traffic; work done by CSXT or other delay incident to or necessary for safe maintenance of railroad traffic; or for any delays due to compliance with these Special Provisions.

C. Agency and Contractor shall cooperate with others participating in the construction of the Project to the end that all work may be carried on to the best advantage.

D. Agency and Contractor understand and agree that CSXT does not assume any responsibility for work performed by others in connection the Project. Agency and Contractor further understand and agree that they shall have no claim whatsoever against CSXT for any inconvenience, delay or additional cost incurred by Agency or Contractor on account of operations by others.

VII. STORAGE OF MATERIALS AND EQUIPMENT

Agency and Contractor shall not store their materials or equipment on CSXT's property or where they may potentially interfere with CSXT's operations, unless Agency or Contractor has received CSXT Representative's prior written permission. Agency and Contractor understand and agree that CSXT will not be liable for any damage to such materials and equipment from any cause and that CSXT may move, or require Agency or Contractor to move, such material and equipment at Agency's or Contractor's sole expense. To minimize the possibility of damage to the railroad tracks resulting from the unauthorized use of equipment, all grading or other construction equipment that is left

parked near the tracks unattended by watchmen shall be immobilized to the extent feasible so that it cannot be moved by unauthorized persons.

VIII. CONSTRUCTION PROCEDURES

A. General

1. Construction work on CSXT property shall be subject to CSXT's inspection and approval.
2. Construction work on CSXT property shall be in accord with CSXT's written outline of specific conditions and with these Special Provisions.
3. Contractor shall observe the terms and rules of the CSXT Safe Way manual, which Agency and Contractor shall be required to obtain from CSXT, and in accord with any other instructions furnished by CSXT or CSXT's Representative.

B. Blasting

1. Agency or Contractor shall obtain CSXT Representative's and Agency Representative's prior written approval for use of explosives on or adjacent to CSXT property. If permission for use of explosives is granted, Agency or Contractor must comply with the following:

    a. Blasting shall be done with light charges under the direct supervision of a responsible officer or employee of Agency or Contractor.

    b. Electric detonating fuses shall not be used because of the possibility of premature explosions resulting from operation of two-way train radios.

    c. No blasting shall be done without the presence of an authorized representative of CSXT. At least 10 days' advance notice to CSXT Representative is required to arrange for the presence of an authorized CSXT representative and any flagging that CSXT may require.

    d. Agency or Contractor must have at the Project site adequate equipment, labor and materials, and allow sufficient time, to (i) clean up (at Agency's expense) debris resulting from the blasting without any delay to trains; and (ii) correct (at Agency's expense) any track misalignment or other damage to CSXT's property resulting from the blasting, as directed by CSXT Representative, without delay to trains. If Agency's or Contractor's actions result in delay of any trains, including Amtrak passenger trains, Agency

shall bear the entire cost thereof.

e. Agency and Contractor shall not store explosives on CSXT property.

2. CSXT Representative will:

a. Determine the approximate location of trains and advise Agency or Contractor of the approximate amount of time available for the blasting operation and clean-up.

b. Have the authority to order discontinuance of blasting if, in his or her opinion, blasting is too hazardous or is not in accord with these Special Provisions.

IX. MAINTENANCE OF DITCHES ADJACENT TO CSXT TRACKS

Agency or Contractor shall maintain all ditches and drainage structures free of silt or other obstructions that may result from their operations. Agency or Contractor shall provide erosion control measures during construction and use methods that accord with applicable state standard specifications for road and bridge construction, including either (1) silt fence; (2) hay or straw barrier; (3) berm or temporary ditches; (4) sediment basin; (5) aggregate checks; and (6) channel lining. All such maintenance and repair of damages due to Agency's or Contractor's operations shall be performed at Agency's expense.

X. FLAGGING / INSPECTION SERVICE

A. CSXT has sole authority to determine the need for flagging required to protect its operations and property. In general, flagging protection will be required whenever Agency or Contractor or their equipment are, or are likely to be, working within fifty (50) feet of live track or other track clearances specified by CSXT, or over tracks.

B. Agency shall reimburse CSXT directly for all costs of flagging that is required on account of construction within CSXT property shown in the Plans, or that is covered by an approved plan revision, supplemental agreement or change order.

C. Agency or Contractor shall give a minimum of 10 days' advance notice to CSXT Representative for anticipated need for flagging service. No work shall be undertaken until the flag person(s) is/are at the job site. If it is necessary for CSXT to advertise a flagging job for bid, it may take up to 90-days to obtain this service, and CSXT shall not be liable for the cost of delays attributable to obtaining such service.

D. CSXT shall have the right to assign an individual to the site of the Project to perform inspection service whenever, in the opinion of CSXT Representative, such inspection may be necessary. Agency shall reimburse CSXT for the costs incurred by CSXT for such inspection service. Inspection service shall not relieve Agency or Contractor from liability for its Work.

E. CSXT shall render invoices for, and Agency shall pay for, the actual pay rate of the flagpersons and inspectors used, plus standard additives, whether that amount is above or below the rate provided in the Estimate. If the rate of pay that is to be used for inspector or flagging service is changed before the work is started or during the progress of the work, whether by law or agreement between CSXT and its employees, or if the tax rates on labor are changed, bills will be rendered by CSXT and paid by Agency using the new rates. Agency and Contractor shall perform their operations that require flagging protection or inspection service in such a manner and sequence that the cost of such will be as economical as possible.

XI. UTILITY FACILITIES ON CSXT PROPERTY

Agency shall arrange, upon approval from CSXT, to have any utility facilities on or over CSXT Property changed as may be necessary to provide clearances for the proposed trackage.

XII. CLEAN-UP

Agency or Contractor, upon completion of the Project, shall remove from CSXT's Property any temporary grade crossings, any temporary erosion control measures used to control drainage, all machinery, equipment, surplus materials, falsework, rubbish, or temporary buildings belonging to Agency or Contractor. Agency or Contractor, upon completion of the Project, shall leave CSXT Property in neat condition, satisfactory to CSXT Representative.

XIII. FAILURE TO COMPLY

If Agency or Contractor violate or fail to comply with any of the requirements of these Special Provisions, (a) CSXT may require Agency and/or Contractor to vacate CSXT Property; and (b) CSXT may withhold monies due Agency and/or Contractor; (c) CSXT may require Agency to withhold monies due Contractor; and (d) CSXT may cure such failure and the Agency shall reimburse CSXT for the cost of curing such failure, provided such cost is reasonable, and if necessary under Florida law, competitively procured.

EXHIBIT D

FORCE ACCOUNT ESTIMATE

ACCT. CODE : 709 - FL3234
Buy America

Form Revision 20251029.B

ESTIMATE SUBJECT TO REVISION AFTER: 6/24/2027	**DOT NO.:** 621516J	
CITY: Palmetto	**COUNTY:** Manatee	**STATE:** FL
DESCRIPTION: S. Dock Street: Upgrade crossing surface with concrete panels and CE&I and Flagging services for roadway improvements and resurfacing.		
DIVISION: Florida	**SUB-DIV:** Palmetto	**MILE POST:** AZA 906.62
AGENCY PROJECT NUMBER: Manatee County, Florida Port Authority Project		

PRELIMINARY ENGINEERING:					
Contracted & Administrative Engineering Services				$	-
Subtotal				**$**	**-**
CONSTRUCTION ENGINEERING/INSPECTION:					
Contracted & Administrative Engineering Services				$	49,107
Subtotal				**$**	**49,107**
FLAGGING SERVICE: (Contract/CSX Labor)					
Engineering Labor (Foreman/Inspector/Flagman)	15	Days @	$ 700.00	$	10,500
Additive 168.10% (Engineering Department)				$	17,651
Subtotal				**$**	**28,151**
SIGNAL & COMMUNICATIONS WORK:				**$**	**5,000**
TRACK WORK:				**$**	**167,443**
CONTRACT WORK:				**$**	**-**
PROJECT SUBTOTAL:				**$**	**249,700**
CONTINGENCIES: 10.00%				$	24,970
PROJECT TOTAL: **********				$	274,671
CURRENT AUTHORIZED BUDGET: **********				$	-
TOTAL SUPPLEMENT REQUESTED: **********				**$**	**274,671**
DIVISION OF COST:					
Agency 100.00%				$	274,671
Railroad 0.00%				$	-
				$	**274,671**

NOTE: Estimate is based on FULL CROSSING CLOSURE during work by Railroad Forces.

This estimate has been prepared based on site conditions, anticipated work duration periods, material prices, labor rates, manpower and resource availability, and other factors known as of the date prepared. The actual cost for CSXT work may differ based upon the agency's requirements, their contractor's work procedures, and/or other conditions that become apparent once construction commences or during the progress of the work

Office of Director - CSXT Public Projects, Jacksonville, Florida

Estimated prepared by: Benesch **Approved by:** KSW **CSXT Public Project Group**

DATE: 06/23/26 **REVISED:** **DATE:** 06/24/26

EXHIBIT E

PAYMENT SCHEDULE

Advance Payment in Full

Upon execution and delivery of notice to proceed with the Project, Agency will deposit with CSXT a sum equal to the Reimbursable Expenses, as shown by the Estimate. If CSXT anticipates that it may incur Reimbursable Expenses in excess of the deposited amount, CSXT will request an additional deposit equal to the then remaining Reimbursable Expenses which CSXT estimates that it will incur. CSXT shall request such additional deposit by delivery of invoices to Agency. Agency shall make such additional deposit within 30 days following delivery of such invoice to Agency.

EXHIBIT F

INSURANCE REQUIREMENTS

I. Insurance Policies:

Agency's Contractor, if and to the extent that they are performing work on or about CSXT's property, shall procure and maintain the following insurance policies:

1. Commercial General Liability coverage at their sole cost and expense with limits of not less than $5,000,000 in combined single limits for bodily injury and/or property damage per occurrence, and such policies shall name CSXT as an additional named insured. The policy shall include endorsement ISO CG 24 17 evidencing that coverage is provided for work within 50 feet of a railroad. If such endorsement is not included, railroad protective liability insurance must be provided as described in item 4 below.

2. Statutory Worker's Compensation and Employers Liability Insurance with limits of not less than $1,000,000, which insurance must contain a waiver of subrogation against CSXT and its affiliates (if permitted by state law).

3. Commercial automobile liability insurance with limits of not less than $1,000,000 combined single limit for bodily injury and/or property damage per occurrence, and such policies shall name CSXT as an additional named insured. The policy shall include endorsement ISO CA 20 70 evidencing that coverage is provided for work within 50 feet of a railroad. If such endorsement is not included, railroad protective liability insurance must be provided as described in item 4 below.

4. Railroad protective liability insurance with limits of not less than $5,000,000 combined single limit for bodily injury and/or property damage per occurrence and an aggregate annual limit of $10,000,000, which insurance shall satisfy the following additional requirements:

    a. The Railroad Protective Insurance Policy must be on the ISO/RIMA Form of Railroad Protective Insurance - Insurance Services Office (ISO) Form CG 00 35.

    b. CSX Transportation must be the named insured on the Railroad Protective Insurance Policy.

    c. Name and Address of Contractor must appear on the Declarations page.

    d. Description of operations must appear on the Declarations page and must match the Project description.

e. Authorized endorsements must include the Pollution Exclusion Amendment - CG 28 31, unless using form CG 00 35 version 96 and later.

f. Authorized endorsements may include:

(i) Broad Form Nuclear Exclusion - IL 00 21
(ii) 30-day Advance Notice of Non-renewal or cancellation
(iii) Required State Cancellation Endorsement
(iv) Quick Reference or Index - CL/IL 240

g. Authorized endorsements may not include:

(i) A Pollution Exclusion Endorsement except CG 28 31
(ii) A Punitive or Exemplary Damages Exclusion
(iii) A "Common Policy Conditions" Endorsement
(iv) Any endorsement that is not named in Section 4 (e) or (f) above.
(v) Policies that contain any type of deductible

5. All insurance companies must be A. M. Best rated A- and Class VII or better.

6. The CSX OP number or CSX contract number, as applicable, must appear on each Declarations page and/or certificates of insurance.

7. Such additional or different insurance as CSXT may require.

II. Additional Terms

1. Contractor must submit the original Railroad Protective Liability policy, Certificates of Insurance and all notices and correspondence regarding the insurance policies to:

Insurance Department
CSX Transportation, Inc.
500 Water Street, C-907
Jacksonville, FL 32202

OR

insurancedocuments@csx.com

2. Neither Agency nor Contractor may begin work on the Project until it has received CSXT's written approval of the required insurance.

SCHEDULE I

AGENCY'S CONTRACTOR'S ACCEPTANCE

To and for the benefit of CSX Transportation, Inc. ("CSXT") and to induce CSXT to permit the Agency's Contractor on or about CSXT's property for the purposes of performing work in accordance with the Agreement dated _____, 20___, between the **MANATEE COUNTY, FLORIDA PORT AUTHORITY** and CSXT, the Agency's Contractor hereby agrees to abide by and perform all applicable terms of the Agreement, including, but not limited to Exhibits C and F to the Agreement, and Sections 3, 9 and 11 of the Agreement.

Contractor: _____

By: _____
Name: _____
Title: _____
Date: _____

\\COR\130459.7

100% DESIGN DRAWINGS

SEAPORT MANATEE
SOUTH DOCK STREET PAVING
SEAPORT MANATEE, FLORIDA

PREPARED FOR:

SEAPORT Manatee
The right turn on Tampa Bay

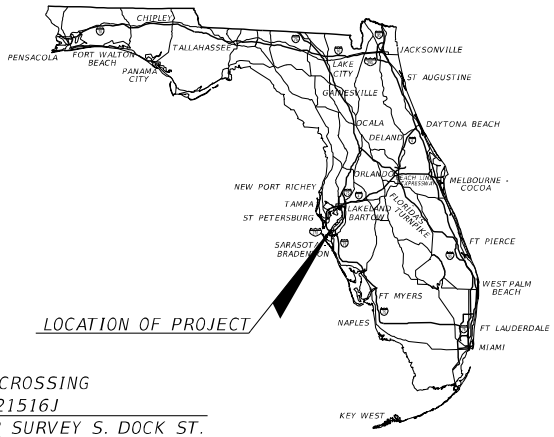

BEGIN PROJECT
STA 19+90.88 ℄ SURVEY S. DOCK ST.

CSX RAILROAD CROSSING
DOT NUMBER 621516J
STA 36+13.22 ℄ SURVEY S. DOCK ST.
RR MP AZA 906.62

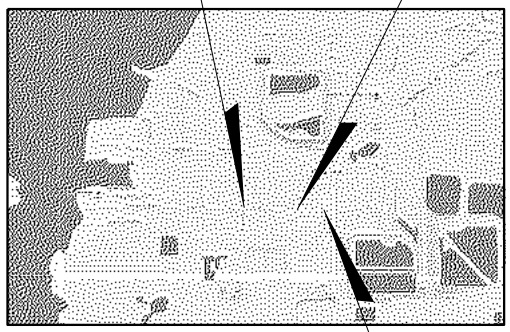

END PROJECT
STA 44+52.26 ℄ SURVEY S. DOCK ST.

EXHIBIT B

N

N.T.S.

INDEX OF PLANS

SHEET NO.	SHEET DESCRIPTION
C1	KEY SHEET
C2	SIGNATURE SHEET
C3 - C4	SUMMARY OF PAY ITEMS
C5 - C7	TYPICAL SECTION
C8	GENERAL NOTES
C9 - C14	ROADWAY PLAN
C15 - C20	ROADWAY PROFILE
C21 - C23	GRADING DETAILS
C24	DRAINAGE STRUCTURES
C25 - C51	CROSS SECTIONS
C52 - C57	EROSION CONTROL PLAN
C58 - C72	TEMPORARY TRAFFIC CONTROL PLAN
C73	TABULATION OF QUANTITIES
C74 - C79	SIGNING AND PAVEMENT MARKING PLAN
C80	SPECIAL DETAILS

GOVERNING STANDARD PLANS:

Florida Department of Transportation, FY2026-27 Standard Plans for Road and Bridge Construction and applicable Interim Revisions (IRs).

Standard Plans for Road Construction and associated IRs are available at the following website: http://www.fdot.gov/design/standardplans

GOVERNING STANDARD SPECIFICATIONS:

Florida Department of Transportation, FY2026-27 Standard Specifications for Road and Bridge Construction at the following website: http://www.fdot.gov/programmanagement/Implemented/SpecBooks

SCOPE OF WORK

OVERVIEW
THE PROJECT INCLUDES THE RECONSTRUCTION OF SOUTH DOCK STREET BETWEEN REEDER ROAD AND US 41. A TRUCK TURN AROUND AREA WILL BE CONSTRUCTED ON THE NORTH SIDE OF SOUTH DOCK STREET JUST EAST OF THE EXISTING ENTRANCE GATE. A SHOULDER TRUCK TURN-OUT AREA WILL ALSO BE PROVIDED ON THE SOUTH SIDE OF SOUTH DOCK STREET NEAR THE PROPOSED TRUCK TURN AROUND. A PIPE CULVERT CROSSING WILL BE CONSTRUCTED JUST WEST OF THE EXISTING RAILROAD CROSSINGS TO ACCOMMODATE FUTURE DITCH IMPROVEMENTS.

CONSTRUCTION GENERALLY CONSISTS OF BUT IS NOT LIMITED TO THE FOLLOWING SCOPE OF WORK:

CIVIL WORK
- RECONSTRUCTION OF THE TWO LANES OF TRAFFIC ALONG SOUTH DOCK STREET.
- CONSTRUCTION OF VEHICLE TURN AROUND AND TURN-OUT AREAS.
- CONSTRUCTION OF PIPE CULVERT CROSSING.
- INSTALLATION OF NEW SIGNING AND PAVEMENT MARKINGS.
- OTHER CIVIL WORK AS DESCRIBED ON THESE DRAWINGS AND AS SPECIFIED IN THE CONSTRUCTION DOCUMENTS.

PREPARED BY:

RS&H

1715 N Westshore Blvd
Suite 600
Tampa, FL 33607
813-289-5550

SURVEYOR OF RECORD

TAYLOR HENNINGE, P.S.M.
P.S.M. No. 7279
McKIM & CREED, INC.

ENGINEER OF RECORD

ANDREW J. BYRD, P.E.
P.E. No. 83301
RS&H, INC.

BID PLANS
14 MAY 2026

SEAPORT Manatee
The right turn on Tampa Bay

MANATEE COUNTY PORT AUTHORITY
300 TAMPA BAY WAY, SUITE 1
PALMETTO, FL 34221

Revision | By | Appd | MM/DD/YY

Client/Project
SEAPORT MANATEE
SOUTH DOCK STREET PAVING
MANATEE COUNTY, FLORIDA

KEY SHEET

RS&H, INC.
1715 N. WESTSHORE BLVD.
SUITE 600
TAMPA, FL 33607
813-289-5550

Permit-Seal

MCPA Project Number:	ITB-20260127-5
Project Number:	10044334006
SCALE:	N/A
JJG	AJB	AJB	10.01.25
Dwn.	Chkd.	Dsgn.	MM.DD.YY
Drawing No.	C1		
Revision	Sheet		
0	1 of 80		

THE OFFICIAL RECORD OF THIS SHEET IS THE ELECTRONIC FILE DIGITALLY SIGNED AND SEALED UNDER RULE 61G15-23.004, F.A.C.

P:\Manatee_Co_Port_Auth\10044334006_Gtr_South_Dock_StreetRoadway\KEYSR001.dgn - KEY SHEET
By:ajb
6/15/2026
11:55:35 AM

ORIGINAL DRFT • ANSI B

ANDREW J. BYRD
LICENSE
No 83301
STATE OF
FLORIDA
PROFESSIONAL ENGINEER

THIS ITEM HAS BEEN DIGITALLY SIGNED AND SEALED BY:

Andrew J Byrd
Digitally signed by Andrew J Byrd
Date: 2026.06.15 13:17:55-04'00'

ON THE DATE ADJACENT TO THE SEAL

SIGNATURE MUST BE VERIFIED ON ANY ELECTRONIC COPIES.

RS&H, INC.
1715 N WESTSHORE BLVD, SUITE 600
TAMPA, FLORIDA 33607
ANDREW J. BYRD, P.E. NO. 83301

THE ABOVE NAMED PROFESSIONAL ENGINEER SHALL BE RESPONSIBLE FOR THE FOLLOWING SHEETS IN ACCORDANCE WITH RULE 61G15-23.004, F.A.C.

SHEET NO.	SHEET DESCRIPTION
C1	KEY SHEET
C2	SIGNATURE SHEET
C3 - C4	SUMMARY OF PAY ITEMS
C5 - C7	TYPICAL SECTION
C8	GENERAL NOTES
C9 - C14	ROADWAY PLAN
C15 - C20	ROADWAY PROFILE
C21 - C23	GRADING DETAILS
C25 - C51	CROSS SECTIONS
C58 - C72	TEMPORARY TRAFFIC CONTROL PLAN

ROBERT GARRIGUES
LICENSE
No 47652
STATE OF
FLORIDA
PROFESSIONAL ENGINEER

THIS ITEM HAS BEEN DIGITALLY SIGNED AND SEALED BY:

Robert M Garrigues
Digitally signed by Robert M Garrigues
Date: 2026.06.15 13:06:55-04'00'

ON THE DATE ADJACENT TO THE SEAL

SIGNATURE MUST BE VERIFIED ON ANY ELECTRONIC COPIES.

RS&H, INC.
1715 N WESTSHORE BLVD, SUITE 600
TAMPA, FLORIDA 33607
ROBERT GARRIGUES, P.E. NO. 47652

THE ABOVE NAMED PROFESSIONAL ENGINEER SHALL BE RESPONSIBLE FOR THE FOLLOWING SHEETS IN ACCORDANCE WITH RULE 61G15-23.004, F.A.C.

SHEET NO.	SHEET DESCRIPTION
C2	SIGNATURE SHEET
C22	DRAINAGE STRUCTURES
C50 - C55	EROSION CONTROL PLAN

CHOWDHURY HAIDER
LICENSE
No 66783
STATE OF
FLORIDA
PROFESSIONAL ENGINEER

THIS ITEM HAS BEEN DIGITALLY SIGNED AND SEALED BY:

Chowdhury Haider
2026.06.15 12:17:36-04'00'

ON THE DATE ADJACENT TO THE SEAL

SIGNATURE MUST BE VERIFIED ON ANY ELECTRONIC COPIES.

RS&H, INC.
1715 N WESTSHORE BLVD, SUITE 600
TAMPA, FLORIDA 33607
CHOWDHURY HAIDER, P.E. NO. 66783

THE ABOVE NAMED PROFESSIONAL ENGINEER SHALL BE RESPONSIBLE FOR THE FOLLOWING SHEETS IN ACCORDANCE WITH RULE 61G15-23.004, F.A.C.

SHEET NO.	SHEET DESCRIPTION
C2	SIGNATURE SHEET
C73	TABULATION OF QUANTITIES
C74 - C79	SIGNING AND PAVEMENT MARKING PLAN
C80	SPECIAL DETAILS

EXHIBIT B

BID PLANS
14 MAY 2026

SEAPORT Manatee
The Inter-Tech on Tampa Bay

MANATEE COUNTY PORT AUTHORITY
300 TAMPA BAY WAY, SUITE 1
PALMETTO, FL 34221

Revision	By	Appd.	MM.DD.YY

Client/Project
SEAPORT MANATEE
SOUTH DOCK STREET PAVING
MANATEE COUNTY, FLORIDA

SIGNATURE SHEET

RS&H

RS&H, INC.
1715 N. WESTSHORE BLVD.
SUITE 600
TAMPA, FL 33607
813-289-5550

Permit-Seal

MCPA Project Number:	ITB-20260127-5
Project Number:	10044334006
SCALE:	N/A

JEL	AJB	AJB	06.09.25
Dwn.	Chkd.	Dsgn.	MM.DD.YY

Drawing No. C2

Revision	Sheet
0	2 of 80

P:\Manatee_Co_Port_Auth\10044334006_GC_South_Dock_Street\Roadway\SIGNRD01.dgn : SIGNRD01
ByrdA 6/15/2026 11:55:37 AM
ORIGINAL SHEET • ANSI B

MANATEE COUNTY
SEAPORT MANATEE
PROJECT SUMMARY OF PAY ITEMS
FOR PROJECT: 10044334006

ITEM PROJECT: 10044334006

PROJECT(S): 10044334006 | COUNTY: MANATEE

0200 SUMMARY OF ROADWAY

ITEM NUMBER	ITEM DESCRIPTION	UNIT	10044334006	QUANTITY TOTAL
0101 1	MOBILIZATION	LS	1	1
0102 1	MAINTENANCE OF TRAFFIC	LS/DA	1/90	1/90
0102 2200	SPECIAL DETOUR- TEMPORARY PAVEMENT	LS/SY	1/25	1/25
0102 2300	SPECIAL DETOUR- TEMPORARY EARTHWORK/BASE	LS/CY	1/1.6	1/1.6
0102 60	WORK ZONE SIGN	ED	7650	7650
0102 99	PORTABLE CHANGEABLE MESSAGE SIGN, TEMPORARY	ED	770	770
0102 115	TYPE III BARRICADE	ED	2475	2475
0102 71 16	TEMPORARY BARRIER, F&I, FREE STANDING	LF	192	192
0102 71 26	TEMPORARY BARRIER, RELOCATE, FREE STANDING	LF	36	36
102 74 1	CHANNELIZING DEVICE- TYPES I, II, DI, VP, DRUM, OR LCD	ED	10305	10305
0104 10 3	SEDIMENT BARRIER	LF	3923	3923
0104 18	INLET PROTECTION SYSTEM	EA	10	10
0107 1	LITTER REMOVAL	AC	11.62	11.62
0107 2	MOWING	AC	11.62	11.62
0110 1 1	CLEARING & GRUBBING	LS/AC	1/2.23	1/2.23
0110 23	TREE REMOVAL	EA	7	7
0120 1	REGULAR EXCAVATION	CY	2258.2	2258.2
0120 6	EMBANKMENT	CY	599.8	599.8
0160 4	TYPE B STABILIZATION	SY	6826	6826
285702	OPTIONAL BASE, BASE GROUP 02	SY	369	369
285714	OPTIONAL BASE, BASE GROUP 14	SY	6173	6173
0327 70 5	MILLING EXIST ASPH PAVT, 2" AVG DEPTH	SY	953	953
0334 1 13	SUPERPAVE ASPHALTIC CONC, TRAFFIC C	TN	1955.3	1955.3
0430175166	PIPE CULVERT, OPT MATERIAL, ROUND, 66"S/CD	LF	144	144
0520 1 10	CONCRETE CURB & GUTTER, TYPE F	LF	173	173
0522 1	CONCRETE SIDEWALK AND DRIVEWAYS, 4" THICK	SY	46	46
0550 10241	FENCING, TYPE B, 7.1-8.0', WITH BARBED WIRE ATTACHMENT	LF	94	94
0570 1 2	PERFORMANCE TURF, SOD	SY	2593	2593
0570 1 3	PERFORMANCE TURF, SOD AND SOIL-SHOULDER TREATMENT INDEX 570-010	SY	44	44
0710 11101	PAINTED PAVEMENT MARKINGS, STANDARD, WHITE, SOLID, 6"	GM	0.525	0.525
0710 11125	PAINTED PAVEMENT MARKINGS, STANDARD, WHITE, SOLID FOR STOP LINE OR CROSSWALK, 24	LF	93	93
0710 11141	PAINTED PAVEMENT MARKINGS, STANDARD, WHITE, 2-4 DOTTED GUIDELINE/ 6-10 DOTTED EXTENSION, 6"	GM	0.050	0.050
0710 11201	PAINTED PAVEMENT MARKINGS, STANDARD, YELLOW, SOLID, 6"	GM	0.075	0.075
0710 11241	PAINTED PAVEMENT MARKINGS, STANDARD, YELLOW, 2-4 DOTTED GUIDELINE/6-10 DOTTED EXTENSION, 6"	GM	0.041	0.041

MANATEE COUNTY
SEAPORT MANATEE
PROJECT SUMMARY OF PAY ITEMS
FOR PROJECT: 10044334006

ITEM PROJECT: 10044334006

PROJECT(S): 10044334006 | COUNTY: MANATEE

0300 SUMMARY OF SIGNING & PAVEMENT MARKINGS

ITEM NUMBER	ITEM DESCRIPTION	UNIT	10044334006	QUANTITY TOTAL
0700 1111	Single Column Ground Sign Assembly, F&I Ground Mount, Less Than 12 SF	EA	4	4
0700 1500	Single Column Ground Sign Assembly, Relocate	EA	6	6
0700 1600	Single Column Ground Sign Assembly, Remove	EA	3	3
0700 2500	Multi-Column Ground Sign Assembly, Relocate	EA	1	1
0700 3101	Sign Panel, Furnish & Install Ground Mount, Up To 12 SF	EA	2	2
0700 3601	Sign Panel, Remove, Up To 12 SF	EA	2	2
0706 1 3	Raised Pavement Marker, Type B	EA	195	195
0710 11190	Painted Pavement Markings, Standard, White, Island Nose	SF	6	6
0710 90	Painter Pavement Markings, Final Surface	LS	1	1
0711 11124	Thermoplastic, Standard, White, Solid, 18" For Diagonals And Chevrons	LF	43	43
0711 11141	Thermoplastic, Standard, White, Solid, 2-4 Dotted Guideline/ 6-10 Gap Extension, 6"	GM	0.043	0.043
0711 11125	Thermoplastic, Standard, White, Solid, 24 For Crosswalk And Stop Bar	LF	81	81
0711 11160	Thermoplastic, Standard, White, Message Or Symbol	EA	2	2
0711 11224	Thermoplastic, Standard, Yellow, Solid, 18 For Diagonal Or Chevrons	LF	319	319
0711 11241	Thermoplastic, Standard, Yellow, 2-4 Dotted Guide Line /6-10 Dotted Extension Line, 6"	GM	0.030	0.030
0711 14193	Thermoplastic, Preformed, 12" White On Asphalt Pavement, Railroad Dynamic Envelope	LF	154	154
0711 15101	Thermoplastic, Standard - Open Graded Asphalt Surfaces, White, Solid, 6	GM	0.693	0.693
0711 15102	Thermoplastic, Standard - Open Graded Asphalt Surfaces, White, Solid, 8	GM	0.028	0.028
0711 15131	Thermoplastic, Standard-Open Graded Asphalt Surfaces, White, Skip, 6" ,10-30 Skip Or 3-9 Lane Drop	GM	0.054	0.054
0711 15201	Thermoplastic, Standard - Open Graded Asphalt Surfaces, Yellow, Solid, 6	GM	0.838	0.838

EXHIBIT B

BID PLANS
14 MAY 2026

SEAPORT Manatee
The Gateway to Tampa Bay

MANATEE COUNTY PORT AUTHORITY
300 TAMPA BAY WAY, SUITE 1
PALMETTO, FL 34221

No.	Revision	By	Appd	MM/DD/YY

Client/Project
SEAPORT MANATEE
SOUTH DOCK STREET PAVING
MANATEE COUNTY, FLORIDA

SUMMARY OF PAY ITEMS

RS&H, INC.
1715 N. WESTSHORE BLVD.
SUITE 600
TAMPA, FL 33607
813-289-5550

Permit-Seal

MCPA Project Number: ITB-20260127-5
Project Number: 10044334006
SCALE: N/A

JJG	AJB	AJB	06.09.25
Des.	Chkd.	Dsgn.	MM.DD.YY

Drawing No. C3

Revision 0 | Sheet 3 of 80

THE OFFICIAL RECORD OF THIS SHEET IS THE ELECTRONIC FILE DIGITALLY SIGNED AND SEALED UNDER RULE 61G15-23.004, F.A.C.

P:\Manatee_Co_Port_Auth\10044334006_Gtr_South_Dock_Street\Roadway\SIGNRD01.dgn : SIGNRD01
6/15/2026
11:55:39 AM
DynEA

ORIGINAL SHEET - ANSI B

BID ALTERNATE 1

MANATEE COUNTY
SEAPORT MANATEE
PROJECT SUMMARY OF PAY ITEMS
FOR PROJECT: 10044334006

ITEM PROJECT: 10044334006

PROJECT(S): 10044334006 | COUNTY: MANATEE

0200 SUMMARY OF ROADWAY

ITEM NUMBER	ITEM DESCRIPTION	UNIT	10044334006	QUANTITY TOTAL
0101 1	MOBILIZATION	LS	1	1
0102 1	MAINTENANCE OF TRAFFIC	LS/DA	1/90	1/90
0102 60	WORK ZONE SIGN	ED	90	90
0102 115	TYPE III BARRICADE	ED	90	90
0104 10 3	SEDIMENT BARRIER	LF	1281	1281
0104 18	INLET PROTECTION SYSTEM	EA	3	3
0107 1	LITTER REMOVAL	AC	2.80	2.80
0107 2	MOWING	AC	2.80	2.80
0110 1 1	CLEARING & GRUBBING	LS/AC	1/0.51	1/0.51
0120 1	REGULAR EXCAVATION	CY	113.3	113.3
0120 6	EMBANKMENT	CY	48.1	48.1
0160 4	TYPE B STABILIZATION	SY	1076	1076
285714	OPTIONAL BASE, BASE GROUP 14	SY	950	950
0327 70 5	MILLING EXIST ASPH PAVT, 2" AVG DEPTH	SY	968	968
0334 1 13	SUPERPAVE ASPHALTIC CONC, TRAFFIC C	TN	386.3	386.3
0570 1 2	PERFORMANCE TURF, SOD	SY	313	313
0570 1 3	PERFORMANCE TURF, SOD AND SOIL-SHOULDER TREATMENT INDEX 570-010	SY	215	215

MANATEE COUNTY
SEAPORT MANATEE
PROJECT SUMMARY OF PAY ITEMS
FOR PROJECT: 10044334006

ITEM PROJECT: 10044334006

PROJECT(S): 10044334006 | COUNTY: MANATEE

0300 SUMMARY OF SIGNING & PAVEMENT MARKINGS

ITEM NUMBER	ITEM DESCRIPTION	UNIT	10044334006	QUANTITY TOTAL
0700 1500	Single Column Ground Sign Assembly, Relocate	EA	1	1
0700 3101	Sign Panel, Furnish & Install Ground Mount, Up To 12 SF	EA	1	1
0706 1 3	Raised Pavement Marker, Type B	EA	48	48
0711 11125	Thermoplastic, Standard, White, Solid, 24 For Crosswalk And Stop Bar	LF	12	12
0711 11224	Thermoplastic, Standard, Yellow, Solid, 18 For Diagonal Or Chevrons	LF	33	33
0711 15101	Thermoplastic, Standard - Open Graded Asphalt Surfaces, White, Solid, 6	GM	0.265	0.265
0711 15201	Thermoplastic, Standard - Open Graded Asphalt Surfaces, Yellow, Solid, 6	GM	0.265	0.265

EXHIBIT B

BID PLANS
14 MAY 2026

SEAPORT Manatee
The Right Place Tampa Bay
MANATEE COUNTY PORT AUTHORITY
300 TAMPA BAY WAY, SUITE 1
PALMETTO, FL 34221

Revision	By	Appd.	MM.DD.YY

Client/Project
SEAPORT MANATEE
SOUTH DOCK STREET PAVING
MANATEE COUNTY, FLORIDA

SUMMARY OF PAY ITEMS

RS&H
RS&H, INC.
1715 N. WESTSHORE BLVD.
SUITE 600
TAMPA, FL 33607
813-289-5550

Permit-Seal

MCPA Project Number: ITB-20260127-5
Project Number: 10044334006
SCALE: N/A

JEL	AJB	AJB	06.09.25
Dwn.	Chkd.	Dsgn.	MM.DD.YY

Drawing No. C4

Revision 0 | Sheet 4 of 80

THE OFFICIAL RECORD OF THIS SHEET IS THE ELECTRONIC FILE DIGITALLY SIGNED AND SEALED UNDER RULE 61G15-23.004, F.A.C.

P:\Manatee_Co_Port_Auth\10044334006_GC_South_Dock_Street\Roadway\SIGNRD01.dgn : SIGNRD01
ByrdA 6/15/2026 11:55:40 AM
ORIGINAL SHEET - ANSI B

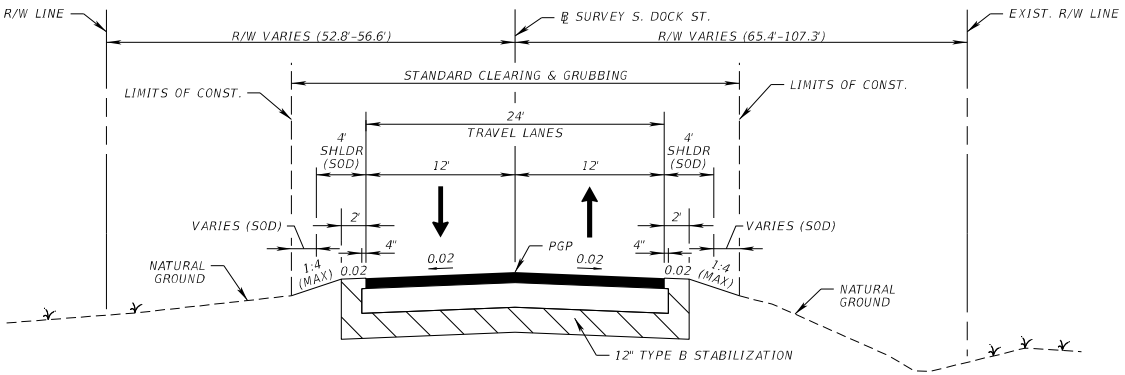

TYPICAL SECTION NO. 1
SOUTH DOCK STREET
STA. 20+10.22 TO STA. 23+01.67 (BID ALTERNATE 1 LIMITS)
STA. 30+84.00 TO STA. 36+08.05
STA. 36+18.13 TO STA. 36+55.94
STA. 36+64.25 TO STA. 41+70.10

NOTE: DESIGN SPEED = 25 MPH

RECONSTRUCTION

OPTIONAL BASE GROUP 14
TYPE SP-12.5 STRUCTURAL COURSE (TRAFFIC C) (2")
AND TYPE SP-19.0 STRUCTURAL COURSE (TRAFFIC C) (3.5")

EXHIBIT B

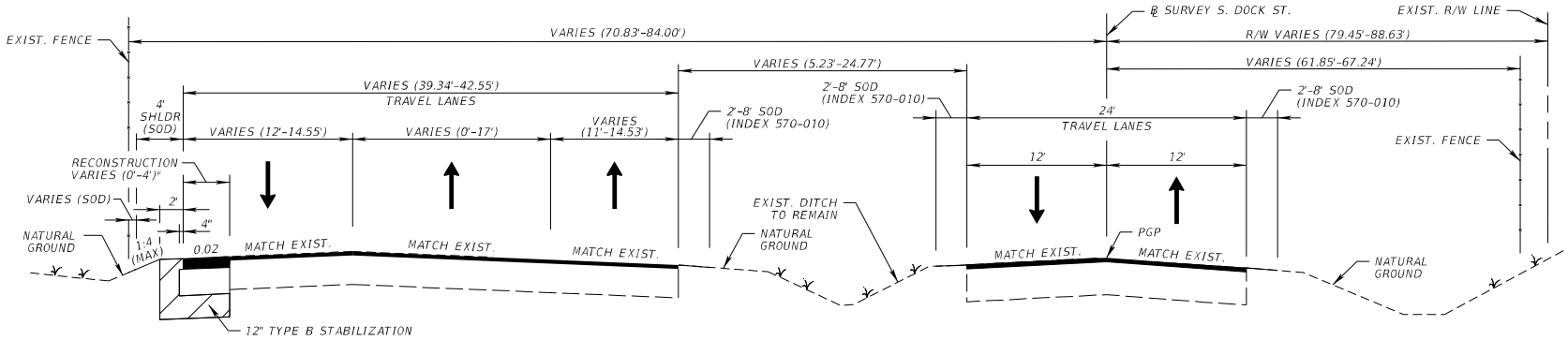

NOTE: DESIGN SPEED = 25 MPH

*BEGINS AT STA. 26+65.55

SOUTH GATE ACCESS ROAD
STA. 25+19.85 TO STA. 27+54.34 (LT.)

RECONSTRUCTION

OPTIONAL BASE GROUP 14
TYPE SP-12.5 STRUCTURAL COURSE (TRAFFIC C) (2")
AND TYPE SP-19.0 STRUCTURAL COURSE (TRAFFIC C) (3.5")

TYPICAL SECTION NO. 2
SOUTH DOCK STREET &
SOUTH GATE ACCESS ROAD

MILLING & RESURFACING

MILL EXISTING ASPHALT PAVEMENT (2" DEPTH)
TYPE SP-12.5 STRUCTURAL COURSE (TRAFFIC C) (2")

SOUTH DOCK STREET
STA. 23+01.67 TO STA. 26+64.82 (RT.)
(BID ALTERNATE 1 LIMITS)

BID PLANS
14 MAY 2026

SEAPORT Manatee
The Port Authority of Tampa Bay

MANATEE COUNTY PORT AUTHORITY
300 TAMPA BAY WAY, SUITE 1
PALMETTO, FL 34221

Revision	By	Appd.	MM/DD/YY

Client/Project
SEAPORT MANATEE
SOUTH DOCK STREET PAVING
MANATEE COUNTY, FLORIDA

TYPICAL SECTION

RS&H

RS&H, INC.
1715 N. WESTSHORE BLVD.
SUITE 600
TAMPA, FL 33607
813-289-5550

Permit-Seal

MCPA Project Number: ITB-20260127-5
Project Number: 10044334006
SCALE: 1" = 40'

JEL	AJB	AJB	10.08.25
Dwn.	Chkd.	Dsgn.	MM.DD.YY

Drawing No. C5

Revision 0 Sheet 5 of 80

THE OFFICIAL RECORD OF THIS SHEET IS THE ELECTRONIC FILE DIGITALLY SIGNED AND SEALED UNDER RULE 61G15-23.004, F.A.C.

P:\Manatee_Co_Port_Auth\10044334006_GC_South_Dock_Street\Roadway\TYPSRD01.dgn : TYPSRD01
ByrdA 6/15/2026 11:55:42 AM
ORIGINAL SHEET • ANSI B

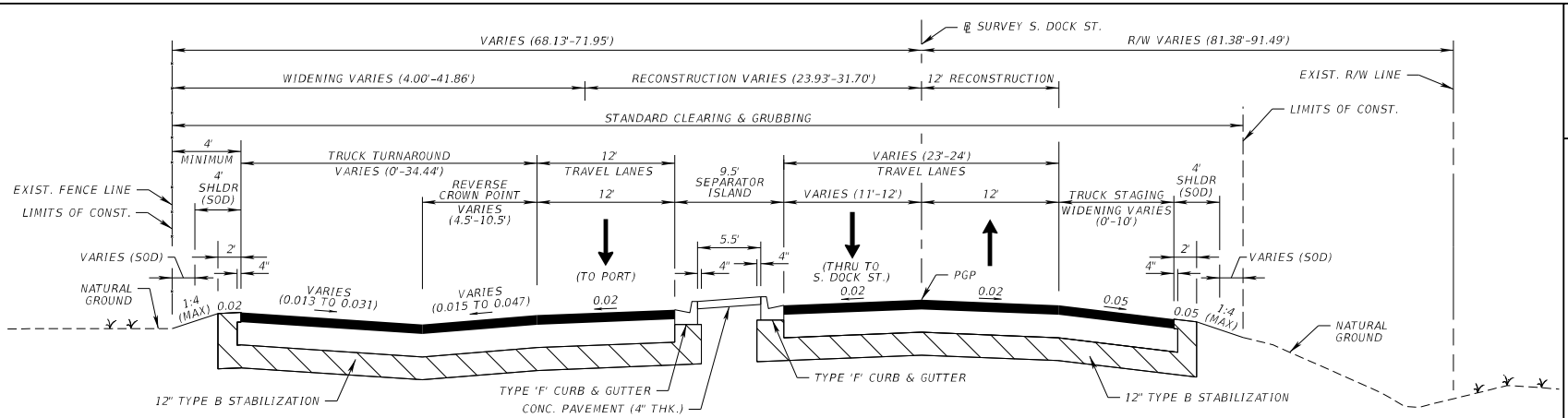

NOTE: DESIGN SPEED = 25 MPH

TYPICAL SECTION NO. 3
SOUTH DOCK STREET, TURN AROUND,
AND STAGING AREA
STA. 26+64.82 TO STA. 30+84.00

RECONSTRUCTION & WIDENING

OPTIONAL BASE GROUP 14
TYPE SP-12.5 STRUCTURAL COURSE (TRAFFIC C) (2")
AND TYPE SP-19.0 STRUCTURAL COURSE (TRAFFIC C) (3.5")

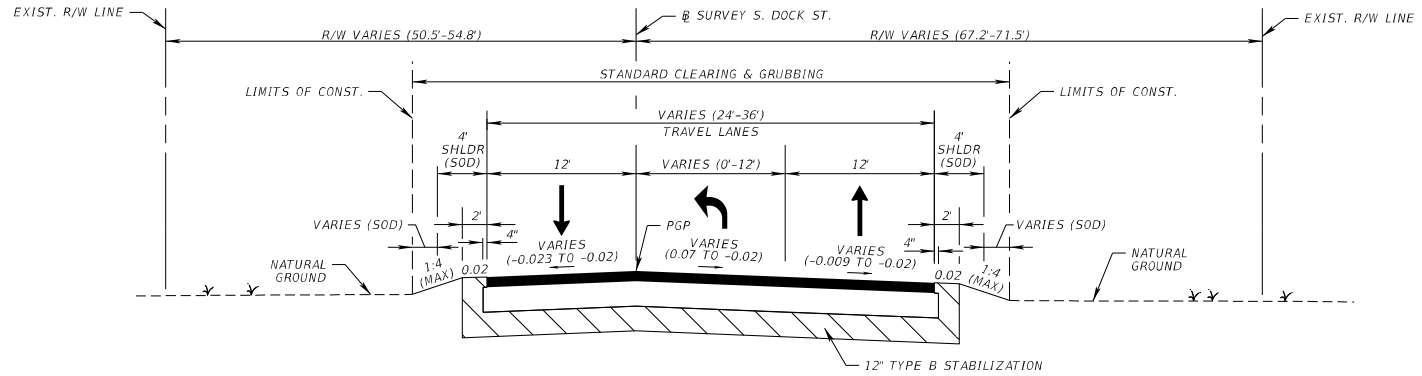

NOTE: DESIGN SPEED = 25 MPH

TYPICAL SECTION NO. 4
SOUTH DOCK STREET
LEFT TURN OPENING
STA. 41+70.10 TO STA. 44+52.26

RECONSTRUCTION

OPTIONAL BASE GROUP 14
TYPE SP-12.5 STRUCTURAL COURSE (TRAFFIC C) (2")
AND TYPE SP-19.0 STRUCTURAL COURSE (TRAFFIC C) (3.5")

EXHIBIT B

BID PLANS
14 MAY 2026

SEAPORT Manatee
The Manatee County Port Authority

MANATEE COUNTY PORT AUTHORITY
300 TAMPA BAY WAY, SUITE 1
PALMETTO, FL 34221

Revision	By	Appd.	MM/DD/YY

Client/Project
SEAPORT MANATEE
SOUTH DOCK STREET PAVING
MANATEE COUNTY, FLORIDA

TYPICAL SECTION

RS&H

RS&H, INC.
1715 N. WESTSHORE BLVD.
SUITE 600
TAMPA, FL 33607
813-289-5550

Permit-Seal

MCPA Project Number:	ITB-20260127-5
Project Number:	10044334006
SCALE:	1" = 40'

JEL	AJB	AJB	10.08.25
Dwn.	Chkd.	Dsgn.	MM.DD.YY

Drawing No. C6

Revision	Sheet
0	6 of 80

THE OFFICIAL RECORD OF THIS SHEET IS THE ELECTRONIC FILE DIGITALLY SIGNED AND SEALED UNDER RULE 61G15-23.004, F.A.C.

P:\Manatee_Co_Port_Auth\10044334006_GC_South_Dock_Street\Roadway\TYPSRD02.dgn : TYPSRD02
ByrdA 6/15/2026 11:55:44 AM
ORIGINAL SHEET • ANSI B

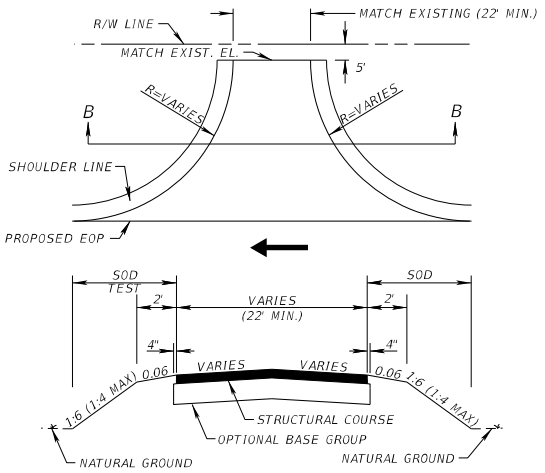

SECTION B-B

OPTIONAL BASE GROUP 2

TYPE SP-12.5 STRUCTURAL COURSE (TRAFFIC C) (1.5")

DRIVEWAY DETAIL

SEE PLANS FOR LOCATIONS

NTS

EXHIBIT B

BID PLANS
14 MAY 2026

SEAPORT Manatee

MANATEE COUNTY PORT AUTHORITY
300 TAMPA BAY WAY, SUITE 1
PALMETTO, FL 34221

Revision	By	Appd	MM.DD.YY

Client/Project
SEAPORT MANATEE
SOUTH DOCK STREET PAVING
MANATEE COUNTY, FLORIDA

TYPICAL SECTION

RS&H

RS&H, INC.
1715 N. WESTSHORE BLVD.
SUITE 600
TAMPA, FL 33607
813-289-5550

Permit-Seal

MCPA Project Number:	ITB-20260127-5
Project Number:	100443340006
SCALE:	1" = 40'

JJG	AJB	AJB	10.28.25
Dsn.	Chkd.	Dapp.	MM.DD.YY

Drawing No. C7

Revision	Sheet
0	7 of 80

THE OFFICIAL RECORD OF THIS SHEET IS THE ELECTRONIC FILE DIGITALLY SIGNED AND SEALED UNDER RULE 61G15-23.004, F.A.C.

P:\Manatee_Co_Port_Auth\100443340006_Gfc_South_Dock_Street\Roadway\TYPSSRD02.dgn : TYPSSRD02
6/15/2026
11:53:44 AM
BystA

ORIGINAL SHEET - ANSI B

GENERAL NOTES:

1. THESE GENERAL NOTES APPLY TO ALL WORK IN THIS SET OF DRAWINGS.

2. FLORIDA LAW (F.S. 553.851) PROTECTION OF UNDERGROUND GAS PIPELINES MANDATES THAT "NO EXCAVATOR SHALL COMMENCE OR PERFORM ANY EXCAVATION IN ANY PUBLIC OR PRIVATE STREET, ALLEY, RIGHT-OF-WAY DEDICATED TO THE PUBLIC USE, OR GAS UTILITY EASEMENT WITHOUT FIRST OBTAINING INFORMATION CONCERNING THE POSSIBLE LOCATION OF GAS PIPELINES IN THE AREA OF THE PROPOSED EXCAVATION." THIS INCLUDES ANY OPERATION UTILIZING HAND TOOLS OR POWER TOOLS WHICH MOVES OR REMOVES ANY STRUCTURE, EARTH, ROCK, OR OTHER MASS OF MATERIAL BY SUCH METHODS AS DIGGING, BACKFILLING, DEMOLITION, GRADING, DITCHING, DRILLING, BORING AND CABLE PLOWING. THE EXCAVATOR MUST NOTIFY THE GAS UTILITY A MINIMUM OF 48 HOURS AND A MAXIMUM OF 5 DAYS PRIOR TO EXCAVATING (EXCLUDING SATURDAYS, SUNDAYS, AND LEGAL HOLIDAYS).

3. NOTIFY ALL APPROPRIATE UTILITY COMPANIES OF PROPOSED START OF WORK IN ACCORDANCE WITH THEIR STANDARD REQUIREMENTS; INCLUDING BUT NOT LIMITED TO WATER, SEWER, POWER, TELEPHONE, GAS AND CABLE TV COMPANIES.

4. FURNISH OWNER WITH ACCURATE AS-BUILT DRAWINGS INCLUDING CAD FILES AND PDFS CERTIFIED BY A FLORIDA LICENSED SURVEYOR SHOWING AS-CONSTRUCTED HORIZONTAL AND VERTICAL DIMENSIONING OF THE WORK. THE SUBMITTAL COPY OF THE AS-BUILT DRAWINGS WILL NOT BE RETURNED. THE RECORD DRAWING OR A REPRODUCIBLE COPY PREPARED BY ENGINEER SHALL BE CERTIFIED BY THE CONTRACTOR AS CORRECT. ALL INFORMATION WHICH IS UNCHANGED AND CURRENT SHALL BE NOTED BY CHECKING OFF OR CLOUDING. ALL REVISED INFORMATION SHALL BE CROSSED THROUGH AND NEW DATA ADDED.

5. SUBMIT SHOP DRAWINGS FOR ENGINEER'S APPROVAL PRIOR TO PROCUREMENT OF MATERIALS.

6. SUBMIT COPIES OF ALL TESTING REPORTS TO THE OWNER AND ENGINEER FOR ACCEPTANCE AND CERTIFICATIONS.

7. PRESERVE ALL MONITORING WELLS IDENTIFIED ONSITE.

8. FURNISH PROPER TRAFFIC MAINTENANCE AND CONTROLS IN ACCORDANCE WITH FDOT STANDARDS.

9. DENSITIES IN ALL UTILITY AND STORM TRENCHES SHALL BE 98% MINIMUM.

10. SHOULD THERE BE ANY CONFLICT BETWEEN THE NOTES ON THIS SHEET AND CURRENT FDOT STANDARD SPECIFICATIONS OR DETAILS, THEN THE FDOT INFORMATION SHALL OVERRIDE.

11. OVERHEAD ELECTRIC PRESENT IN WORK AREA. MAINTAIN MIN. 10' CLEARANCE FROM OVERHEAD ELECTRIC PRIMARY AND NEUTRAL LINES AS REQUIRED BY CURRENT OSHA STANDARDS.

12. ALL SIGNAGE, PAVEMENT MARKING, AND TRAFFIC CONTROL DEVICES SHALL BE IN ACCORDANCE WITH FDOT "MANUAL ON UNIFORM TRAFFIC CONTROL DEVICES FOR STREETS AND HIGHWAYS."

13. ALL TREES ARE TO REMAIN UNLESS SPECIFIED TO BE REMOVED IN THE PLANS.

14. CONTRACTOR TO PERFORM REPAIR WORK AT WASHOUT LOCATION INDICATED IN ROADWAY PLAN (1) AS PART OF BASE BID.

COORDINATE & ELEVATION NOTES:

1. THESE GENERAL NOTES APPLY TO ALL WORK IN THIS SET OF DRAWINGS.

2. COORDINATES SHOWN HEREON ARE REFERENCED TO THE NORTH AMERICAN DATUM OF 1983 WITH THE 2011 ADJUSTMENT (NAD83/11), AND THE FLORIDA STATE PLANE COORDINATE SYSTEM, WEST ZONE (902).

3. VERTICAL COORDINATES SHOWN HEREON ARE BASED ON THE NORTH AMERICAN VERTICAL DATUM OF 1988 (NAVD88).

4. REFER TO THE GENERAL NOTES IN THE TOPOGRAPHIC SURVEY ATTACHED AS PART OF THIS PLAN SET.

GRADING & DRAINAGE NOTES:

1. THESE GENERAL NOTES APPLY TO ALL WORK IN THIS SET OF DRAWINGS.

2. SITE GRADING AND DRAINAGE MATERIALS AND CONSTRUCTION SHALL CONFORM TO FDOT STANDARD SPECIFICATIONS FOR ROAD AND BRIDGE CONSTRUCTION, LATEST EDITION.

3. PROTECT ALL EXISTING SURVEY MONUMENTATION. DISTURBED MONUMENTATION SHALL BE RESTORED BY A FLORIDA-LICENSED LAND SURVEYOR SELECTED BY THE OWNER AT CONTRACTOR'S EXPENSE.

4. GEOTECHNICAL SERVICES HAVE BEEN PROVIDED AS REFERENCED BELOW. THE ENGINEER HAS RELIED ON THE BELOW REFERENCED GEOTECHNICAL REPORT IN PREPARATION OF THESE DRAWINGS. ANY CONFLICT BETWEEN INFORMATION WITHIN THE REPORT AND THESE DRAWINGS SHALL BE REPORTED TO ENGINEER/OWNER. THE ENGINEER ASSUMES NO RESPONSIBILITY FOR THE CORRECTNESS, COMPLETENESS OR ACCURACY OF GEOTECHNICAL INFORMATION. A COPY OF THE GEOTECHNICAL REPORT WILL BE PROVIDED TO THE CONTRACTOR FOR REFERENCE.

   GEOTECHNICAL ENGINEER:
   ARDAMAN & ASSOCIATES, INC.
   FILE No. 25-55-9763
   DATE: SEPTEMBER 23, 2025

5. ALL GRADES ALONG PROPERTY BOUNDARIES SHALL MATCH THE GRADE AT THE PROPERTY LINE.

6. ELEVATIONS OF GRASSED AREAS ARE GIVEN AT FINISHED GRADE (TOP OF SOD OR SEEDED SURFACE).

7. PIPE LENGTHS SHOWN REPRESENT SCALED DISTANCES BETWEEN CENTERLINES OF DRAINAGE STRUCTURES AND FROM INVERTS OF ENDWALLS AND/OR MITERED END SECTIONS. BIDDERS SHALL ADJUST FOR PIPE LENGTHS WHEN BIDDING MITERED END SECTIONS.

8. CONTRACTOR IS RESPONSIBLE FOR IDENTIFYING AND DISPOSING OF ALL WASTE MATERIALS CONSISTENT WITH ALL RULES AND REGULATIONS APPLICABLE TO THE SPECIFIC MATERIAL.

9. ALL DISTURBED AREAS SHALL BE SEEDED OR SODDED.

GRADING AND DRAINAGE MATERIAL SPECIFICATIONS:

1. STORM PIPE SHALL BE REINFORCED CONCRETE PIPE, PER ASTM C-76 CLASS III.

2. ALL STORM STRUCTURES SHALL CONFORM WITH FDOT STANDARD INDEX DRAWINGS AND SPECIFICATIONS.

PAVEMENT GENERAL NOTES

1. A MINIMUM SEPARATION OF 12 INCHES BETWEEN THE BOTTOM OF THE BASE COURSE AND THE SEASONAL HIGH WATER TABLE IF CRUSHED CONCRETE BASE IS USED AND 24 INCHES IF LIMEROCK BASE IS USED.

2. NATURAL OR FILL SUBGRADE SOILS TO A DEPTH OF 12 INCHES BELOW THE BASE SHOULD BE RELATIVELY CLEAN SANDS. THE TOP 2 FEET OF NATURAL SOILS GENERALLY SATISFY THIS REQUIREMENT.

3. STABILIZED SUBGRADE SOILS (ALSO IDENTIFIED AS STABILIZED SUBBASE) SHOULD BE STABILIZED TO A MINIMUM LIMEROCK BEARING RATIO (LBR; FLORIDA METHOD OF TEST DESIGNATION FM 5-515) VALUE OF 40 IF THEY DO NOT ALREADY MEET THIS CRITERION, OR MODIFIED/REPLACED WITH NEW COMPACTED FILL THAT MEETS THE MINIMUM LBR VALUE.

4. THE STABILIZED SUBGRADE COURSE SHOULD BE COMPACTED TO AT LEAST 98 PERCENT OF THE MODIFIED PROCTOR MAXIMUM DRY DENSITY (AASHTO T-180 OR ASTM D-1557). ANY UNDERLYING, NEWLY-PLACED SUBGRADE FILL NEED ONLY BE COMPACTED TO A MINIMUM OF 95 PERCENT OF THE MODIFIED PROCTOR MAXIMUM DRY DENSITY. COMPACTION TESTS SHOULD BE PERFORMED AT A FREQUENCY OF 1 TEST PER 10,000 SQUARE FEET OR FRACTION THEREOF.

5. LIMEROCK BASE MATERIAL FROM AN APPROVED FDOT SOURCE SHOULD HAVE A MINIMUM LBR VALUE OF 100 AND BE COMPACTED TO A MINIMUM OF 98 PERCENT OF THE MAXIMUM DRY DENSITY AS DETERMINED BY THE MODIFIED PROCTOR TEST. LIMEROCK SHOULD BE PLACED IN UNIFORM LIFTS NOT TO EXCEED 6 INCHES LOOSE THICKNESS. RECYCLED LIMEROCK IS NOT A SUITABLE SUBSTITUTE FOR VIRGIN LIMEROCK FOR BASE COURSES BUT MAY BE USED AS A GRANULAR STABILIZING ADMIXTURE.

6. CRUSHED (RECYCLED) CONCRETE BASE SHOULD MEET THE CURRENT FDOT SPECIFICATION 204 FOR RECYCLED MATERIALS.

7. ASPHALT SHOULD BE COMPACTED TO A MINIMUM OF 95 PERCENT OF THE DESIGN MIX DENSITY. ASPHALT SURFACE COURSES SHOULD BE TYPE SP, TYPE S, OR OTHER SUITABLE MIX DESIGN ACCORDING TO FDOT AND LOCAL REQUIREMENTS.

8. TO VERIFY THICKNESS, AFTER PLACEMENT AND COMPACTION OF THE PAVEMENT COURSES, CORE THE WEARING SURFACE TO EVALUATE MATERIAL THICKNESS AND COMPOSITION AT A MINIMUM FREQUENCY OF 5,000 SQUARE FEET OR TWO LOCATIONS PER DAY'S PRODUCTION.

SIGNING AND PAVEMENT MARKING NOTES:

1. ALL SIGNING AND PAVEMENT MARKINGS ARE TO BE PROVIDED IN ACCORDANCE WITH THE LATEST EDITIONS OF THE MUTCD, FDOT DESIGN STANDARDS AND MANATEE COUNTY PUBLIC WORKS DEPARTMENT HIGHWAY, TRAFFIC AND STORM WATER STANDARDS. TRAFFIC CONTROL DEVICES THAT DO NOT CONFORM TO THESE DOCUMENTS, AND THAT ARE WITHIN THE PUBLICLY MAINTAINED RIGHT-OF-WAY, IF ACCEPTABLE, WILL REQUIRE AN EXECUTED MAINTENANCE AGREEMENT PRIOR TO APPROVAL OF CONSTRUCTION PLANS.

WORK ADJACENT OR WITHIN CSX RIGHT-OF-WAY

1. THE CONTRACTOR SHALL NOT STORE EQUIPMENT OR MATERIAL OF ANY KIND ON CSX RIGHT-OF-WAY (ROW) OR WHERE THEY MAY HAVE THE POTENTIAL TO INTERFERE WITH THE CSX OPERATIONS UNLESS CONTRACTOR HAS RECEIVED PRIOR WRITTEN AUTHORIZATION BY CSX REPRESENTATIVE.

2. BASED ON THE PROJECT SCOPE, CSX WILL DETERMINE THE LEVEL OF TRACK/ROW PROTECTION REQUIRED. HOWEVER, NO WORK ON OR WITH IMPACTS TO CSX ROW IS PERMITTED WITHOUT SAID TRACK/ROW PROTECTION.

3. UNDER NO CONDITION SHALL WORK AFFECT THE SAFE PASSAGE OF TRAINS OR OTHER ON TRACK EQUIPMENT.

4. CONTRACTOR AND ALL SUBCONTRACTORS (IF APPLICABLE) SHALL PROCURE AND MAINTAIN RAILROAD PROTECTIVE LIABILITY INSURANCE AND COVERAGE OF INSURANCE BEFORE ACCESSING CSX RIGHT-OF-WAY (ROW).

5. CONTRACTOR SHALL REFER TO THE CSX PUBLIC PROJECTS MANUAL, MOST RECENT EDITION, FOR CONSTRUCTION REQUIREMENTS WHILE WITHIN THE CSX RIGHT-OF-WAY (ROW).

6. CONTRACTOR MUST HAVE AN EMERGENCY ACTION AND HURRICANE PREPAREDNESS PLAN AND MEANS AND METHODS, WHICH SHOULD BE SITE SPECIFIC AND MUST INCLUDE COORDINATION WITH CSX AND CSX REPRESENTATIVE, WHILE WORKING WITHIN THE CSX ROW LIMITS. THESE PLANS MUST BE PROVIDED TO CSX FOR REVIEW AND ACCEPTANCE PRIOR TO WORK COMMENCING WHICH MAY IMPACT CSX RIGHT-OF-WAY (ROW) OR FACILITIES.

7. AGENCY AND CONTRACTOR ARE NOT PERMITTED TO CROSS CSX'S PROPERTY OR TRACKS, EXCEPT ON EXISTING PUBLIC ROAD CROSSINGS, WITH VEHICLES, MEN, OR EQUIPMENT OF ANY KIND WITHOUT PRIOR AUTHORIZATION FROM CSX OR AUTHORIZED REPRESENTATIVE.

8. IF ANY ISSUE OR INCIDENT OCCURS WITHIN CSX RIGHT-OF-WAY (ROW), CONTRACTOR MUST CONTACT THE CSX PUBLIC SAFETY COORDINATION CENTER AT 800-232-0144 AND NOTIFY CSX REPRESENTATIVE.

9. "ONE CALL" SERVICES DO NOT LOCATE BURIED RAILROAD SIGNAL AND COMMUNICATIONS LINES. THE CONTRACTORS SHALL CONTRACT THE RAILROAD'S REPRESENTATIVE TWO (2) WEEKS IN ADVANCE OF THOSE PLACES WHERE EXCAVATION, PILE DRIVING, OR HEAVY LOADS MAY DAMAGE RAILROAD UNDERGROUND LINES ON RAILROAD PROPERTY. UPON REQUEST FROM THE CONTRACTOR OR AGENCY, RAILROAD SIGNAL FORCES WILL LOCATE AND PAINT MARK OR FLAG RAILROAD UNDERGROUND SIGNAL, COMMUNICATION, AND POWER LINES IN THE AREA TO BE DISTURBED FOR THE CONTRACTOR. AVOID EXCAVATION OR OTHER DISTURBANCE OF THESE LINES WHICH ARE CRITICAL TO CONTRACTOR. THE SAFETY OF THE RAILROAD AND THE PUBLIC. IF DISTURBANCE OR EXCAVATION IS REQUIRED NEAR A BURIED RAILROAD SIGNAL, COMMUNICATION, OR POWER LINE, THE LINE SHALL BE POTHOLDED MANUALLY WITH CAREFUL HAND EXCAVATION BY THE CONTRACTOR AND PROTECTED BY THE CONTRACTOR DURING THE COURSE OF THE DISTURBANCE UNDER THE SUPERVISION AND DIRECTION OF A RAILROAD SIGNAL REPRESENTATIVE.

10. ALL SOILS EXCAVATED WITHIN CSX'S RAILROAD RIGHT-OF-WAY SHALL REMAIN ON CSX'S RIGHT-OF-WAY. TESTING OF SOILS ON CSX ROW IS PROHIBITED WITHOUT PRIOR WRITTEN CSX AUTHORIZATION. ANY SOILS EXCAVATED ON CSX ROW CAN BE REUSED ON THE ROW PROVIDED PLACING SOILS ALONG CSX ROW POSES NO ADVERSE IMPACTS TO THE EXISTING TERRAIN, DRAINAGE OR ENVIRONMENT. SHOULD SOIL NEED TO BE REMOVED FROM CSX ROW, THE CSX ENVIRONMENTAL DEPARTMENTS WILL SAMPLE THE SOIL FOR THE DISPOSITION. SOIL STAGED ON THE CSX MUST FOLLOW CSX PROTOCOL AND BE PROPERLY STORED AND/OR PROTECTED FROM THE ELEMENTS AND POTENTIAL EXPOSURE.

11. PROVIDE CSX WITH A 45 DAY ADVANCE NOTICE OF BEGINNING WORK WITHIN THE RAILROAD RIGHT-OF-WAY TO ALLOW FOR THE SCHEDULING OF TRACK/ROW PROTECTION. FAILURE BY THE CONTRACTOR TO MEET THE REQUIREMENTS OF THIS NOTE CONSTITUTES A FULL, COMPLETE ABSOLUTE AND IRREVOCABLE WAIVER BY THE CONTRACTOR OF ANY RIGHT TO CLAIM FOR ADDITIONAL COMPENSATION OR A TIME EXTENSION RELATED TO WORK WITHIN THE RAILROAD RIGHT-OF-WAY.

APPLICABLE FDOT FY2025-26 STANDARD PLANS INDICES:

INDEX #	DESCRIPTION
102-600	GENERAL INFORMATION FOR TRAFFIC CONTROL THROUGH WORK ZONES
102-603	TWO-LANE, TWO-WAY, WORK WITHIN THE TRAVEL WAY
430-001	MISCELLANEOUS DRAINAGE DETAILS
570-010	SHOULDER SODDING AND TURF ON EXISTING FACILITIES
711-001	PAVEMENT MARKINGS
830-T01	RAILROAD (GRADE) CROSSING

EXHIBIT B

BID PLANS
14 MAY 2026

SEAPORT Manatee

MANATEE COUNTY PORT AUTHORITY
300 TAMPA BAY WAY, SUITE 1
PALMETTO, FL 34221

Revision | By | Appd. | MM.DD.YY

Client/Project
SEAPORT MANATEE
SOUTH DOCK STREET PAVING
MANATEE COUNTY, FLORIDA

GENERAL NOTES

RS&H, INC.
1715 N. WESTSHORE BLVD.
SUITE 600
TAMPA, FL 33607
813-289-5550

Permit-Seal

MCPA Project Number: ITB-20260127-5
Project Number: 10044334006
SCALE: N/A

JHL	AJB	AJB	09.12.25
Dwn.	Chkd.	Dsgn.	MM.DD.YY

Drawing No. C8
Revision 0 Sheet 8 of 80

THE OFFICIAL RECORD OF THIS SHEET IS THE ELECTRONIC FILE DIGITALLY SIGNED AND SEALED UNDER RULE 61G15-23.004, F.A.C.

P:\Manatee_Co_Port_Auth\10044334006_GC_South_Dock_Street\Roadway\GNNTRD01.dgn : GNNTRD01
ByrdA 6/15/2026 11:55:46 AM

ORIGINAL SHEET - ANSI B

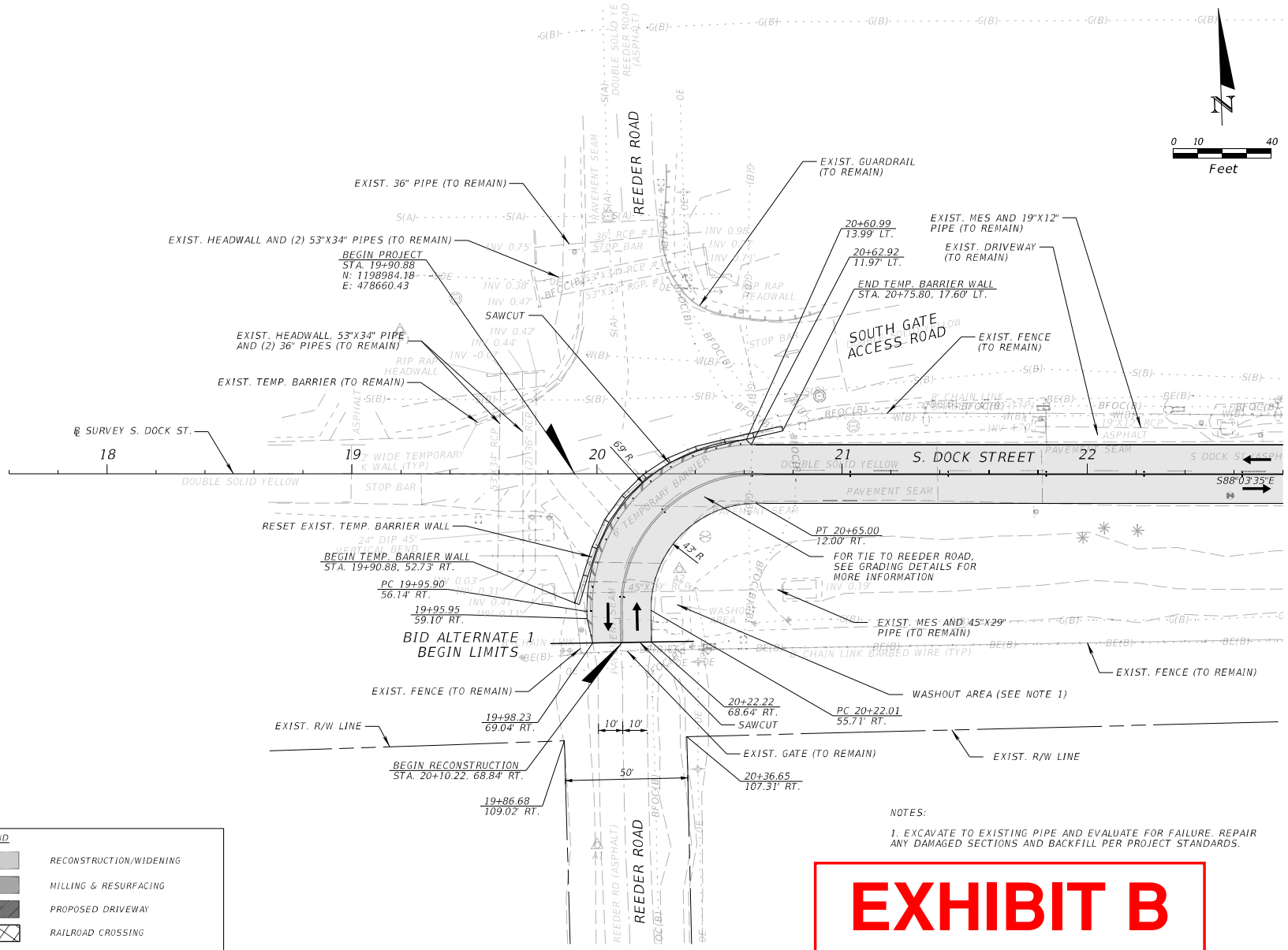

NOTES:

1. EXCAVATE TO EXISTING PIPE AND EVALUATE FOR FAILURE. REPAIR ANY DAMAGED SECTIONS AND BACKFILL PER PROJECT STANDARDS.

EXHIBIT B

BID PLANS
14 MAY 2026

SEAPORT Manatee

Revision

Client/Project
SEAPORT MANATEE
SOUTH DOCK STREET PAVING
MANATEE COUNTY, FLORIDA

ROADWAY PLAN

RS&H

RS&H, INC.
TAMPA, FL 33607
813-289-5550

Permit-Seal

MCPA Project Number:	ITB-20260127-5
Project Number:	100443340006
SCALE:	1" = 40'

JJG	AJB	AJB	06.25.25
Dwn.	Chkd.	Dsgn.	MM.DD.YY

Drawing No. C9

Revision	Sheet
0	9 of 80

THE OFFICIAL RECORD OF THIS SHEET IS THE ELECTRONIC FILE ORIGINALLY SIGNED AND SEALED UNDER RULE 61G15-23.004, F.A.C.

P:\Manatee_Co_Port_Auth\100443340006_Gtr_South_Dock_Street\Roadway\PLANR001.dgn - PLANR001
6/15/2026
11:55:53 AM
ByteA

ORIGINAL SHEET - ANSI B

EXHIBIT B

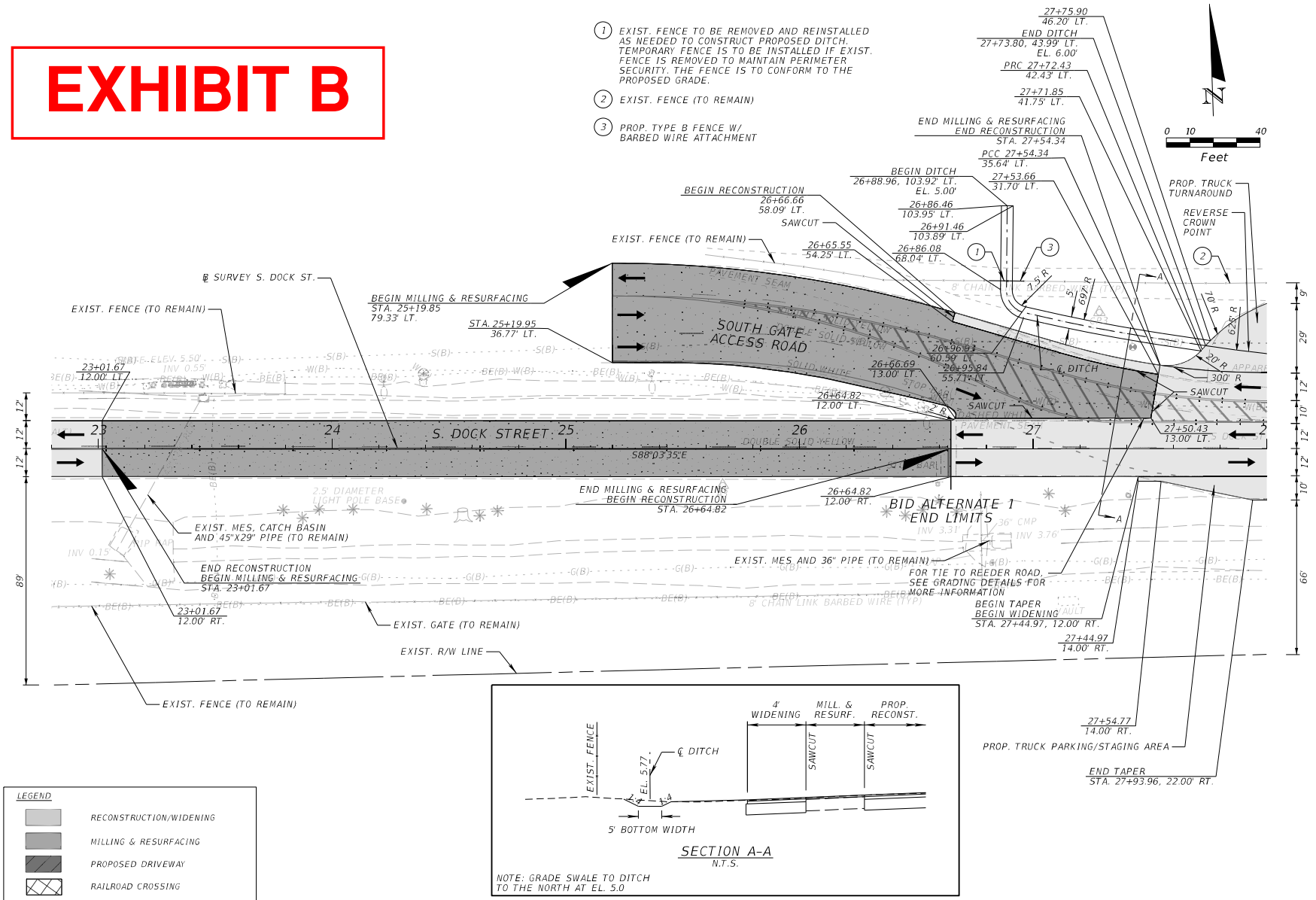

BID PLANS
14 MAY 2026

SEAPORT Manatee

Client/Project
SEAPORT MANATEE
SOUTH DOCK STREET PAVING
MANATEE COUNTY, FLORIDA

ROADWAY PLAN

RS&H
RS&H, INC.
1715 N. WESTSHORE BLVD
SUITE 600
TAMPA, FL 33607
813-289-5550

Permit-Seal

MCPA Project Number: ITB-20260127-5
Project Number: 10044334006
SCALE: 1" = 40'

JEL	AJB	AJB	09.25.25
Dwn.	Chkd.	Dsgn.	MM.DD.YY

Drawing No. C10

Revision 0 Sheet 10 of 80

THE OFFICIAL RECORD OF THIS SHEET IS THE ELECTRONIC FILE INITIALLY SIGNED AND SEALED UNDER RULE 61G15-23.004, F.A.C.

P:\Manatee_Co_Port_Auth\10044334006_GC_South_Dock_Street\Roadway\PLANRD02.dgn : PLANRD02
ByrdA 6/15/2026 11:55:59 AM
ORIGINAL SHEET - 6X11.B

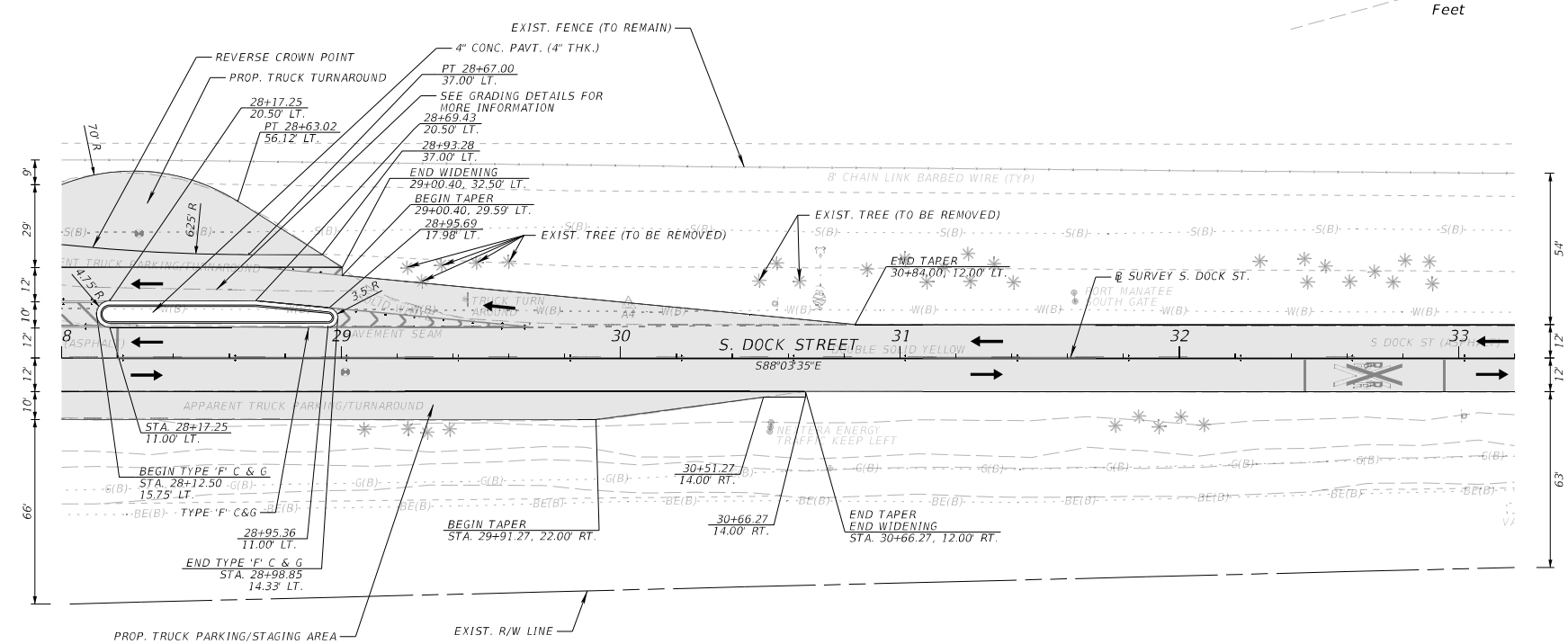

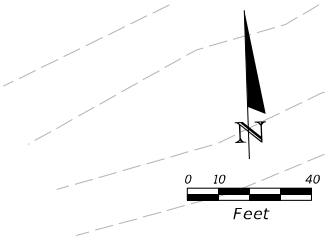

LEGEND

- RECONSTRUCTION/WIDENING
- MILLING & RESURFACING
- PROPOSED DRIVEWAY
- RAILROAD CROSSING
- LANE DIRECTION ARROW

EXHIBIT B

BID PLANS
14 MAY 2026

SEAPORT Manatee

Client/Project
SEAPORT MANATEE
SOUTH DOCK STREET PAVING
MANATEE COUNTY, FLORIDA

ROADWAY PLAN

Revision

RS&H
RS&H, INC.
TAMPA, FL 33607
813-289-5550

Permit-Seal

MCPA Project Number:	ITB-20260127-5
Project Number:	100443340006
SCALE:	1" = 40'

JJG	AJB	AJB	06.25.25
Dwn.	Chkd.	Dsgn.	MM.DD.YY

Drawing No. C11

Revision	Sheet
0	11 of 80

THE OFFICIAL RECORD OF THIS SHEET IS THE ELECTRONIC FILE SIGNED AND SEALED UNDER RULE 61G15-23.004, F.A.C.

P:\Manatee_Co_Port_Auth\100443340006_Gtr_South_Dock_Street\Roadway\PLANR003.dgn : PLANR003
6/15/2026
11:56:04 AM
ByteA

ORIGINAL SHEET - ANSI B

EXHIBIT B

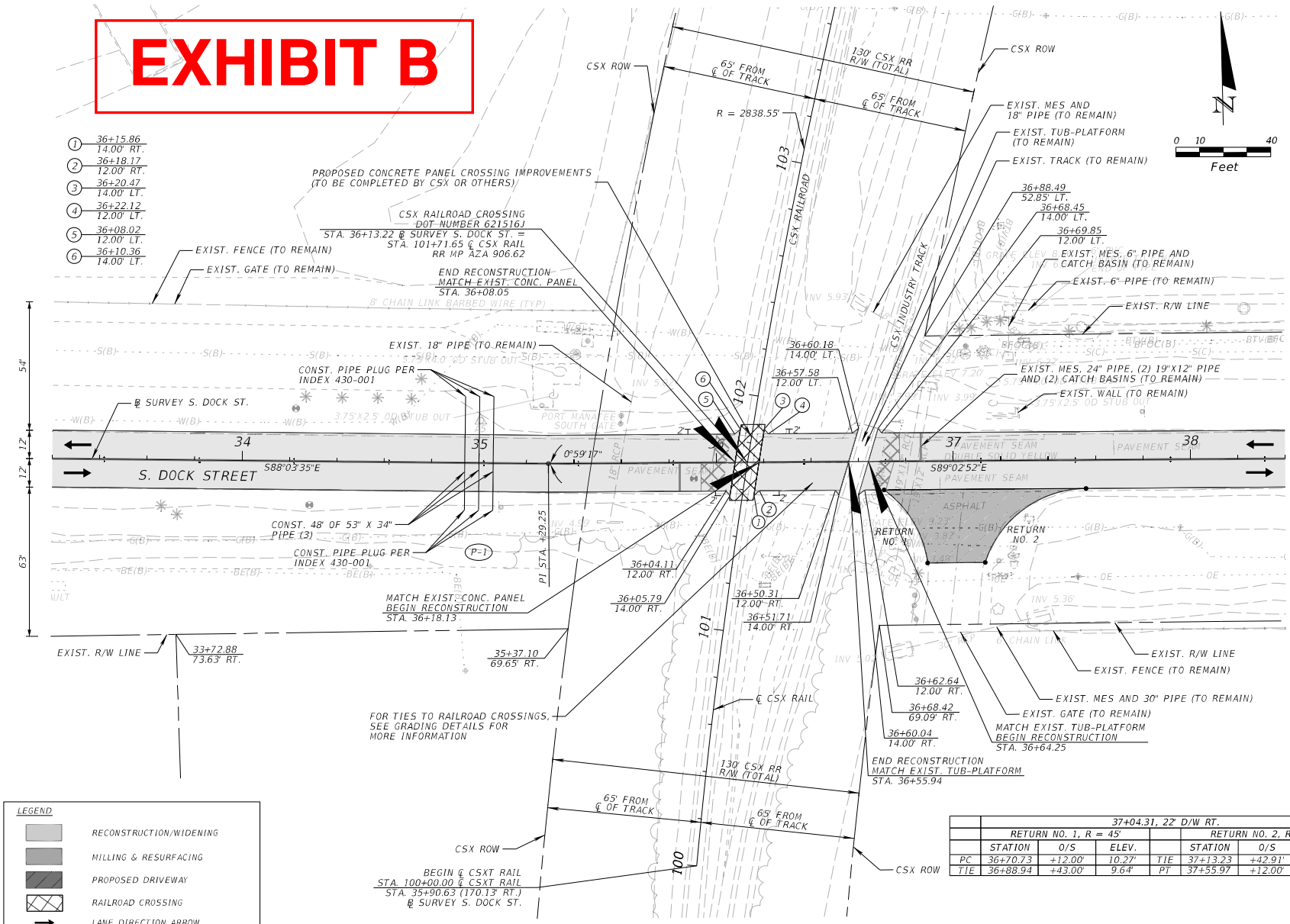

	37+04.31, 22' D/W RT.						
	RETURN NO. 1, R = 45'				RETURN NO. 2, R = 45'		
	STATION	O/S	ELEV.		STATION	O/S	ELEV.
PC	36+70.73	+12.00'	10.27'	TIE	37+13.23	+42.91'	9.39'
TIE	36+88.94	+43.00'	9.64'	PT	37+55.97	+12.00'	10.18'

BID PLANS
14 MAY 2026

SEAPORT Manatee

Revision

Client/Project
SEAPORT MANATEE
SOUTH DOCK STREET PAVING
MANATEE COUNTY, FLORIDA

ROADWAY PLAN

RS&H
RS&H, INC.
1715 N. WESTSHORE BLVD
SUITE 600
TAMPA, FL 33607
813-289-5550

Permit-Seal

MCPA Project Number: ITB-20260127-5
Project Number: 10044334006
SCALE: 1" = 40'

JEL	AJB	AJB	09.25.25
Dwn.	Chkd.	Dsgn.	MM.DD.YY

Drawing No. C12
Revision 0
Sheet 12 of 80

THE OFFICIAL RECORD OF THIS SHEET IS THE ELECTRONIC FILE INITIALLY SIGNED AND SEALED UNDER RULE 61G15-23.004, F.A.C.

P:\Manatee_Co_Port_Auth\10044334006_GC_South_Dock_Street\Roadway\PLANRD04.dgn : PLANRD04
ByrdA 6/15/2026 11:56:09 AM
ORIGINAL SHEET - 6X51B

EXHIBIT B

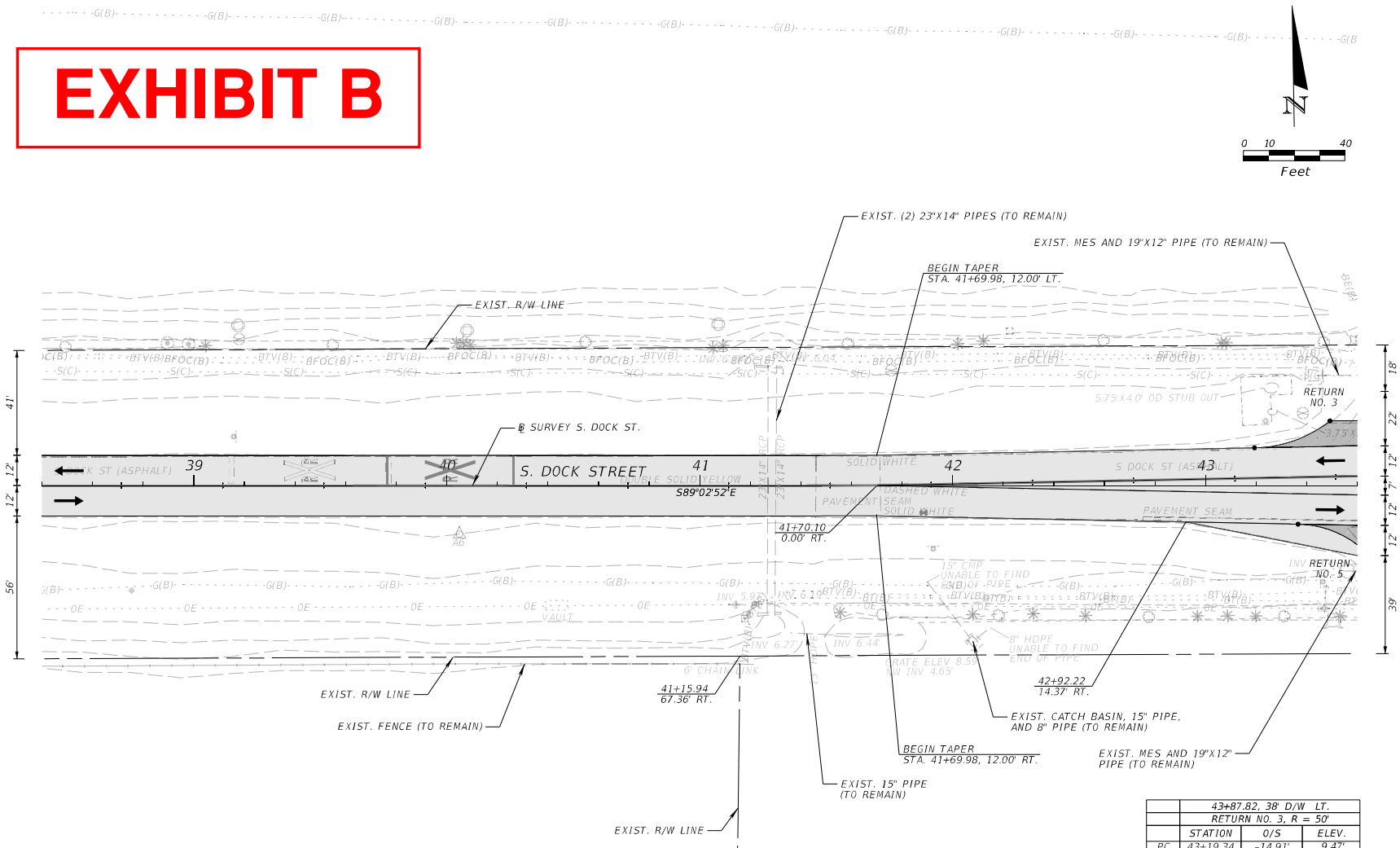

	43+87.82, 38' D/W LT.		
	RETURN NO. 3, R = 50'		
	STATION	O/S	ELEV.
PC	43+19.34	-14.91'	9.47'
TIE	43+49.21	-25.54'	9.44'

	43+87.37, 22' D/W RT.		
	RETURN NO. 5, R = 40'		
	STATION	O/S	ELEV.
PC	43+36.56	+15.25'	9.32'
EOT/POC	43+65.81	+28.81'	9.15'
TIE	43+70.48	+35.33'	9.11'

LEGEND

- RECONSTRUCTION/WIDENING
- MILLING & RESURFACING
- PROPOSED DRIVEWAY
- RAILROAD CROSSING
- LANE DIRECTION ARROW

BID PLANS
14 MAY 2026

SEAPORT Manatee

Revision

Client/Project
SEAPORT MANATEE
SOUTH DOCK STREET PAVING
MANATEE COUNTY, FLORIDA

ROADWAY PLAN

RS&H
RS&H, INC.
1715 N. WESTSHORE BLVD
SUITE 600
TAMPA, FL 33607
813-289-5550

Permit-Seal

MCPA Project Number: ITB-20260127-5
Project Number: 10044334006
SCALE: 1" = 40'

JEL	AJB	AJB	06.25.25
Dwn.	Chkd.	Dsgn.	MM.DD.YY

Drawing No. C13
Revision 0
Sheet 13 of 80

THE OFFICIAL RECORD OF THIS SHEET IS THE ELECTRONIC FILE INITIALLY SIGNED AND SEALED UNDER RULE 61G15-23.004, F.A.C.

P:\Manatee_Co_Port_Auth\10044334006_GC_South_Dock_Street\Roadway\PLANRD05.dgn : PLANRD05
ByrdA 6/15/2026 11:56:14 AM
ORIGINAL SHEET - 6X11.B

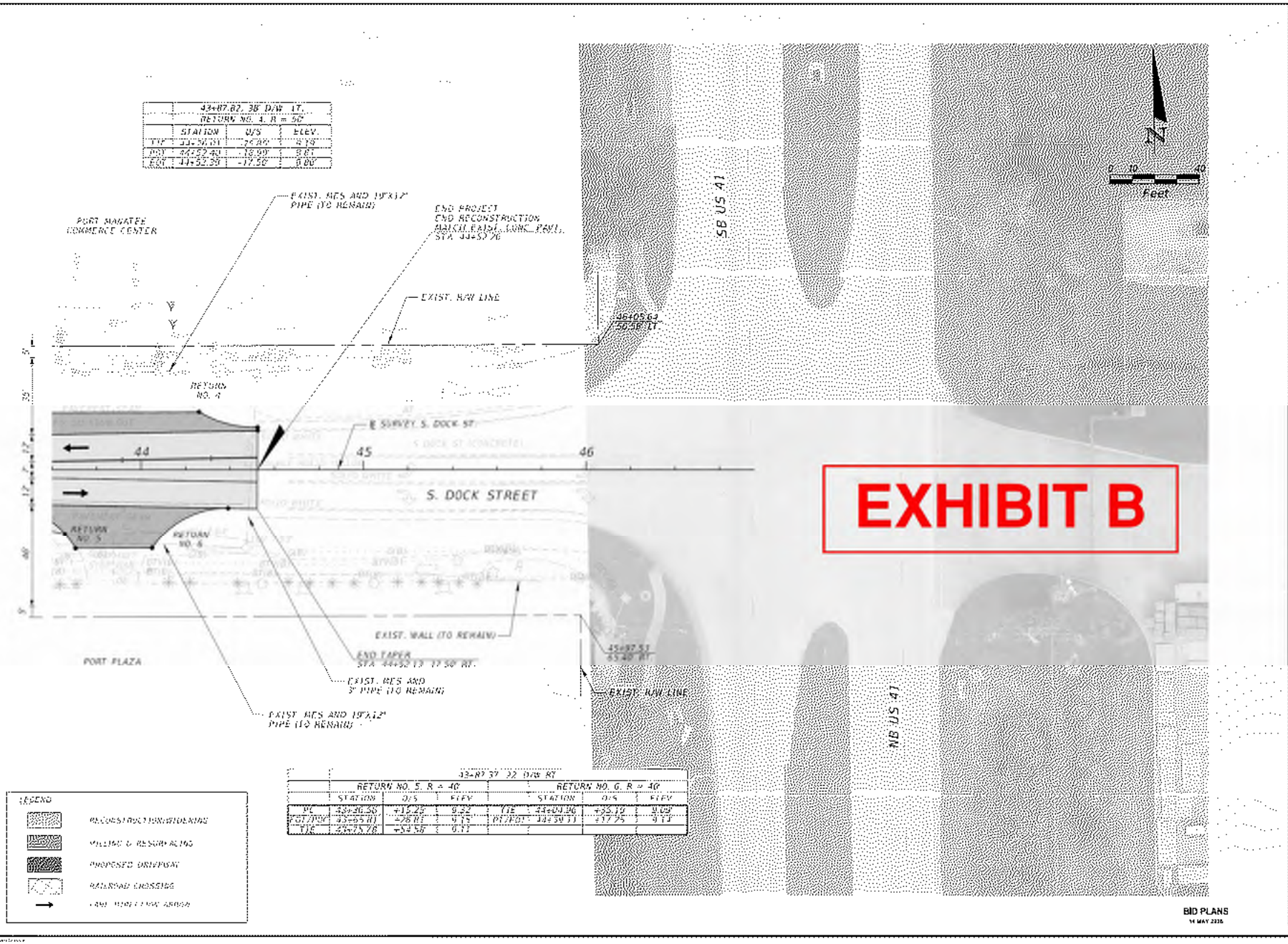

	43+87.37, 22' D/W RT						
	RETURN NO. 5, R = 40'				RETURN NO. 6, R = 40'		
	STATION	O/S	ELEV.		STATION	O/S	ELEV.
PC	43+36.56	+15.29	9.32	TIE	44+04.96	+35.19	9.09'
EOT/PCC	43+65.81	+28.81	9.15'	PT/EOT	44+59.11	+17.25	9.14'
TIE	43+75.78	+54.58'	9.11				

SEAPORT Manatee
The right turn on Tampa Bay

MANATEE COUNTY PORT AUTHORITY
300 TAMPA BAY WAY, SUITE 1
BRADENTON, FL 34220

Revision

Client Project
SEAPORT MANATEE
SOUTH DOCK STREET PAVING
MANATEE COUNTY, FLORIDA

ROADWAY PLAN

RS&H
RS&H, INC.
1715 N. WESTSHORE BLVD
SUITE 600
TAMPA, FL 33607
813-289-9250

Permit Seal

Drawing No. C14
Revision Sheet
0 1 of 84

THE OFFICIAL RECORD OF THIS SHEET IS THE ELECTRONIC FILE DIGITALLY SIGNED AND SEALED UNDER RULE 61G15-23.004, F.A.C.

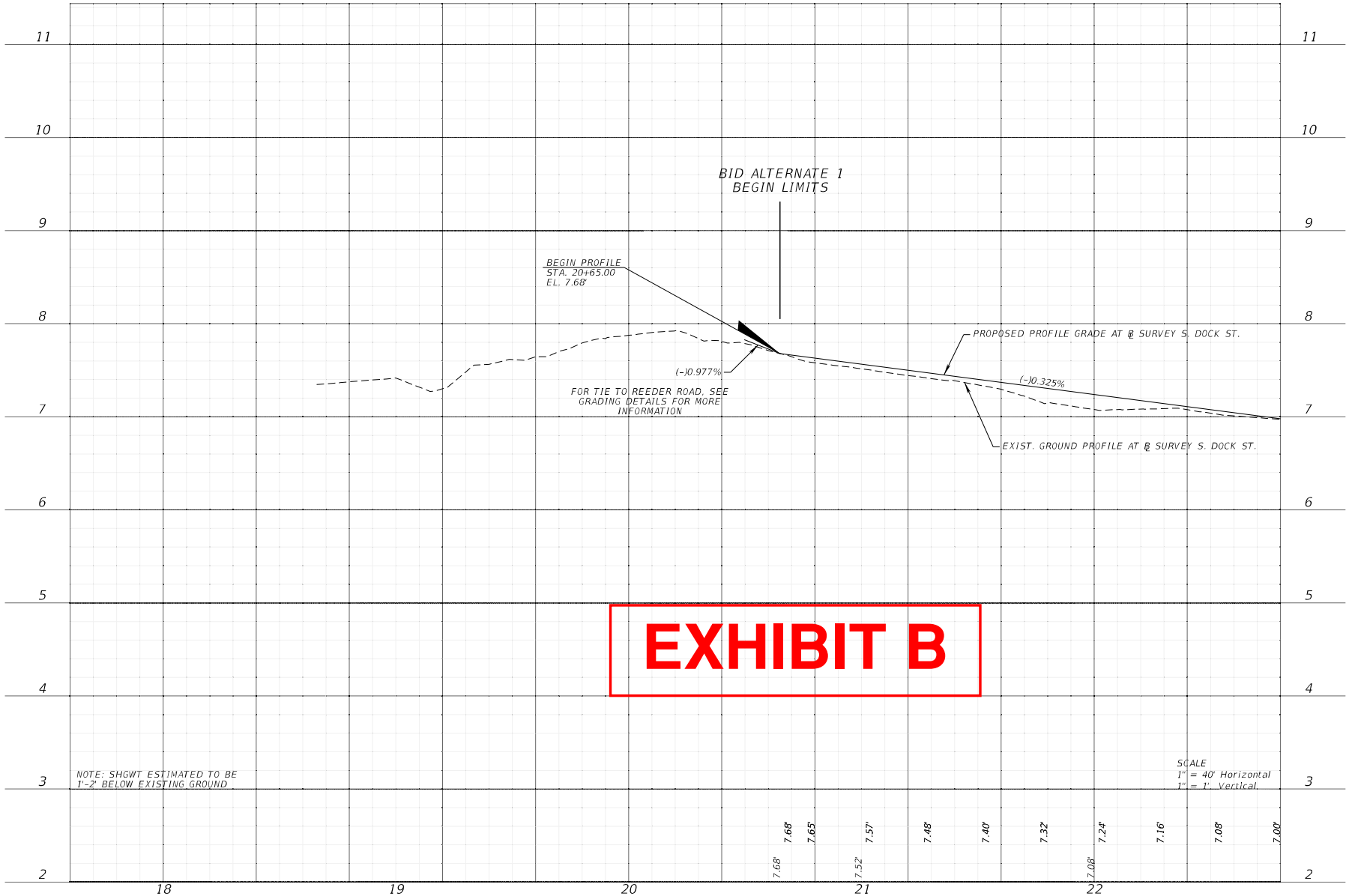

EXHIBIT B

BID PLANS
14 MAY 2026

SEAPORT Manatee
The Agriculture and Seaport Way

MANATEE COUNTY PORT AUTHORITY
[illegible]

Revision | By | Date | Approved

Client/Project
SEAPORT MANATEE
SOUTH DOCK STREET PAVING
MANATEE COUNTY, FLORIDA

ROADWAY PROFILE

RS&H
RS&H, INC.
[illegible]
SUITE 600
TAMPA, FL 33607
813-289-5550

Permit-Seal

MCPA Project Number:	ITB-20260127-5
Project Number:	10044334006
SCALE:	1" = 40'

JEL	AJB	AJB	10.03.25
Dwn.	Chkd.	Dsgn.	MM.DD.YY

Drawing No. C15

Revision 0 | Sheet 15 of 80

THE OFFICIAL RECORD OF THIS SHEET IS THE ELECTRONIC FILE INITIALLY SIGNED AND SEALED UNDER RULE 61G15-23.004, F.A.C.

P:\Manatee_Co_Port_Auth\10044334006_GC_South_Dock_Street\Roadway\PROFRD01.dgn : PROFRD01
ByrdA 6/15/2026 11:56:45 AM
ORIGINAL SHEET • ANSI B

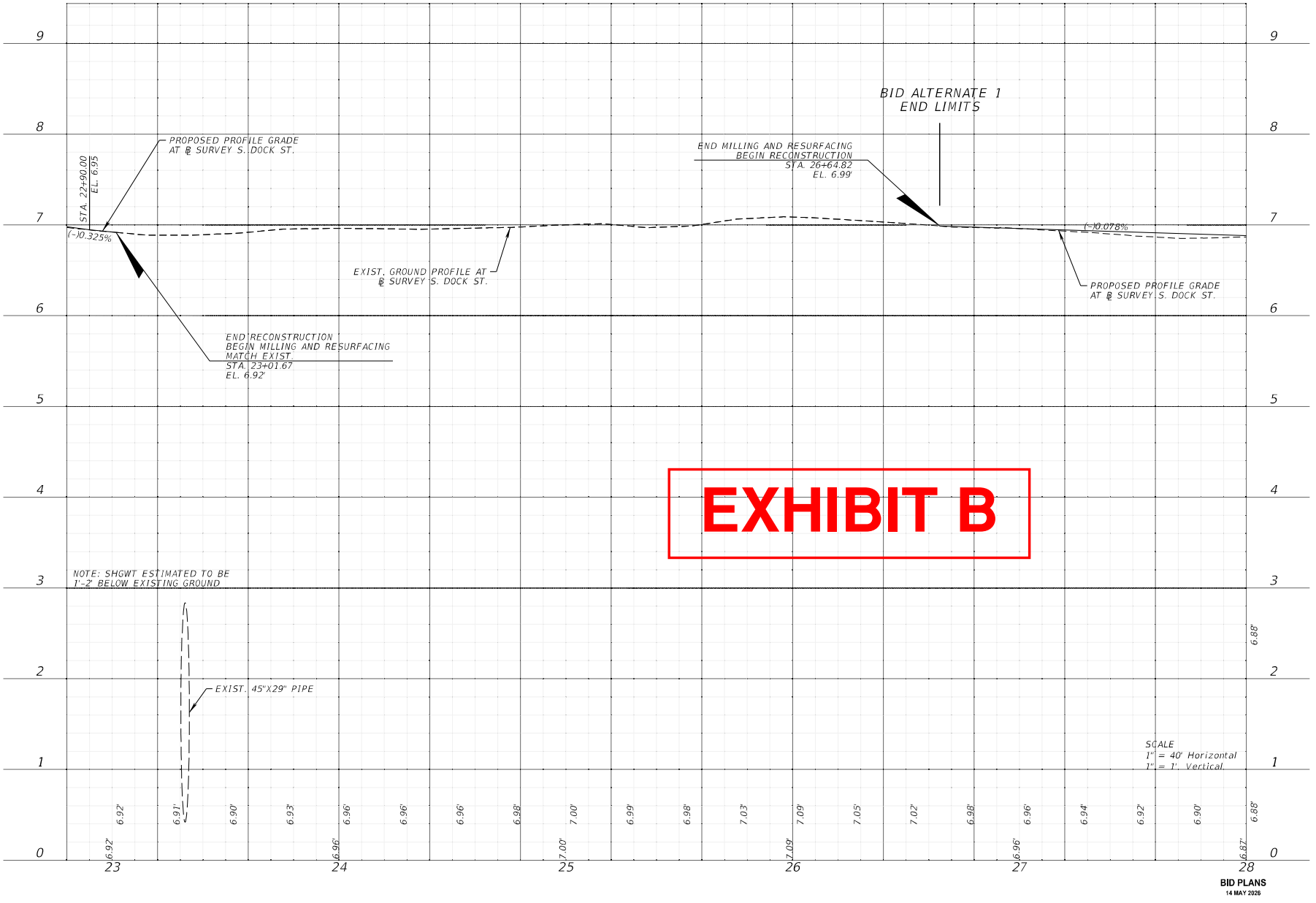

EXHIBIT B

BID PLANS
14 MAY 2026

SEAPORT Manatee

Revision

Client/Project
SEAPORT MANATEE
SOUTH DOCK STREET PAVING
MANATEE COUNTY, FLORIDA

ROADWAY PROFILE

RS&H

RS&H, INC.
1715 N. WESTSHORE BLVD
SUITE 600
TAMPA, FL 33607
813-289-5550

Permit-Seal

MCPA Project Number:	ITB-20260127-5
Project Number:	10044334006
SCALE:	1" = 40'

JEL	AJB	AJB	10.03.25
Dwn.	Chkd.	Dsgn.	MM.DD.YY

Drawing No. C16

Revision	Sheet
0	16 of 80

THE OFFICIAL RECORD OF THIS SHEET IS THE ELECTRONIC FILE INITIALLY SIGNED AND SEALED UNDER RULE 61G15-23.004, F.A.C.

P:\Manatee_Co_Port_Auth\10044334006_GC_South_Dock_Street\Roadway\PROFRD02.dgn : PROFRD02
ByrdA 6/15/2026 11:56:46 AM
ORIGINAL SHEET - 6X18

EXHIBIT B

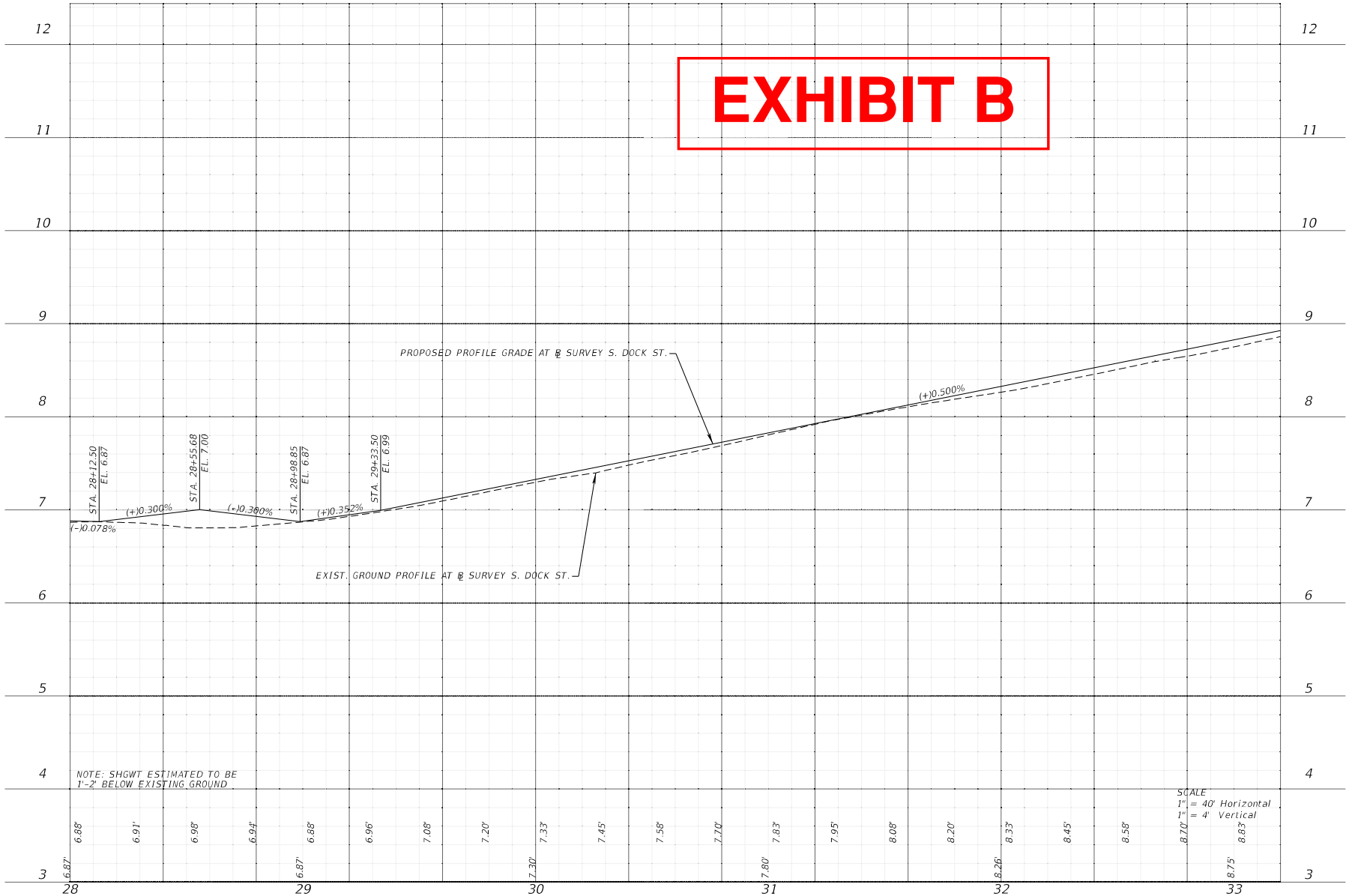

BID PLANS
14 MAY 2026

SEAPORT Manatee
The Agency for the Tampa Bay

MANATEE COUNTY PORT AUTHORITY
[illegible]

Revision | By | Date

Client/Project
SEAPORT MANATEE
SOUTH DOCK STREET PAVING
MANATEE COUNTY, FLORIDA

ROADWAY PROFILE

RS&H
RS&H, INC.
[illegible]
SUITE 600
TAMPA, FL 33607
813-289-5550

Permit-Seal

MCPA Project Number:	ITB-20260127-5
Project Number:	10044334006
SCALE:	1" = 40'

JEL	AJB	AJB	10.03.25
Dwn.	Chkd.	Dsgn.	MM.DD.YY

Drawing No. C17

Revision	Sheet
0	17 of 80

THE OFFICIAL RECORD OF THIS SHEET IS THE ELECTRONIC FILE INITIALLY SIGNED AND SEALED UNDER RULE 61G15-23.004, F.A.C.

P:\Manatee_Co_Port_Auth\10044334006_GC_South_Dock_Street\Roadway\PROFRD03.dgn : PROFRD03
By:tdA 6/15/2026 11:56:47 AM
ORIGINAL SHEET • 6X18

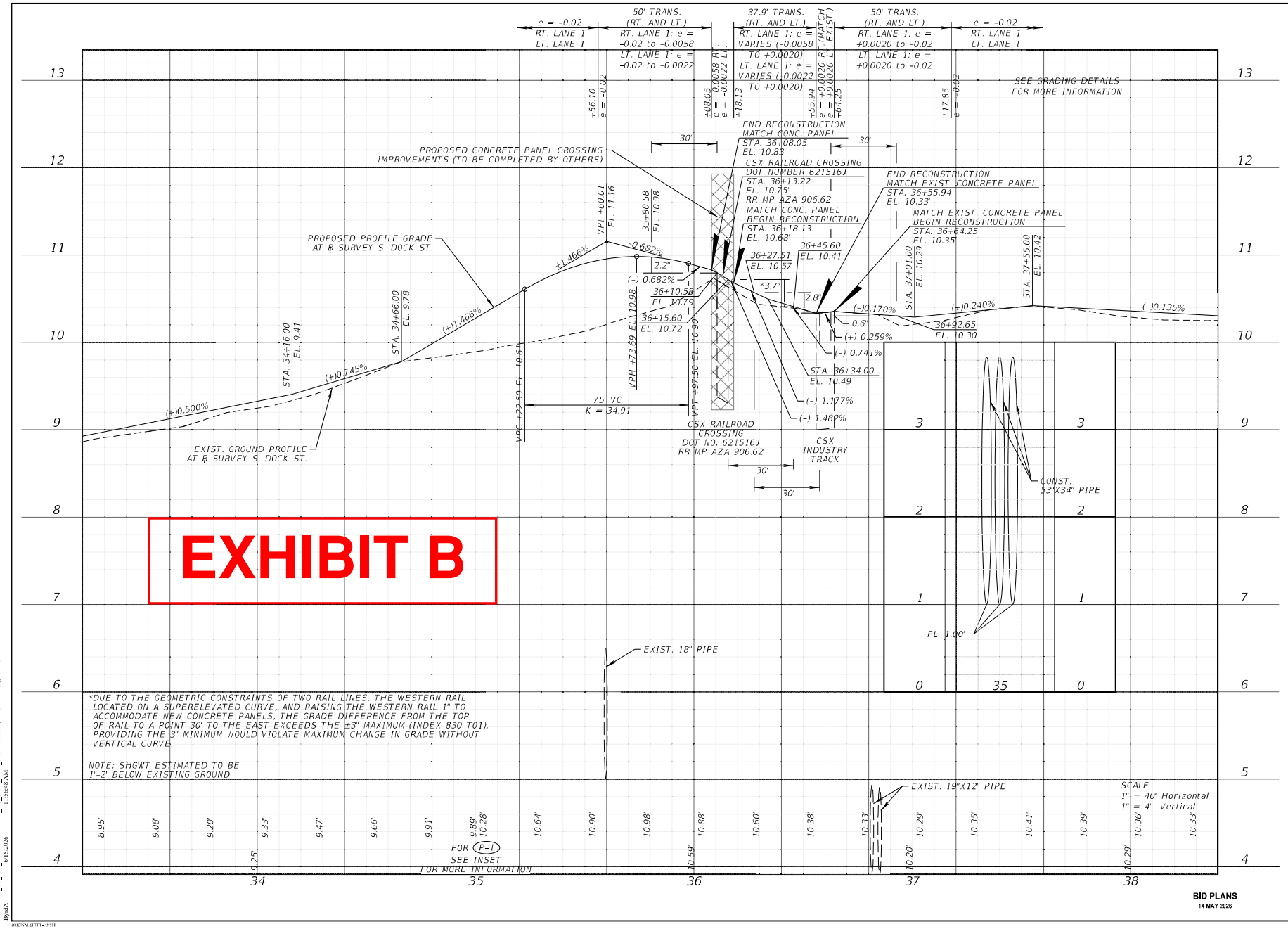

EXHIBIT B

*DUE TO THE GEOMETRIC CONSTRAINTS OF TWO RAIL LINES, THE WESTERN RAIL LOCATED ON A SUPERELEVATED CURVE, AND RAISING THE WESTERN RAIL 1" TO ACCOMMODATE NEW CONCRETE PANELS, THE GRADE DIFFERENCE FROM THE TOP OF RAIL TO A POINT 30' TO THE EAST EXCEEDS THE ±3" MAXIMUM (INDEX 830-T01). PROVIDING THE 3" MINIMUM WOULD VIOLATE MAXIMUM CHANGE IN GRADE WITHOUT VERTICAL CURVE.

NOTE: SHGWT ESTIMATED TO BE 1'-2' BELOW EXISTING GROUND

BID PLANS
14 MAY 2026

SEAPORT Manatee

Client/Project
SEAPORT MANATEE
SOUTH DOCK STREET PAVING
MANATEE COUNTY, FLORIDA

ROADWAY PROFILE

RS&H

RS&H, INC.
1715 N. WESTSHORE BLVD
SUITE 600
TAMPA, FL 33607
813-289-5550

Permit-Seal

MCPA Project Number: ITB-20260127-5
Project Number: 10044334006
SCALE: 1" = 40'

Drawing No. C18
Revision 0
Sheet 18 of 80

THE OFFICIAL RECORD OF THIS SHEET IS THE ELECTRONIC FILE INITIALLY SIGNED AND SEALED UNDER RULE 61G15-23.004, F.A.C.

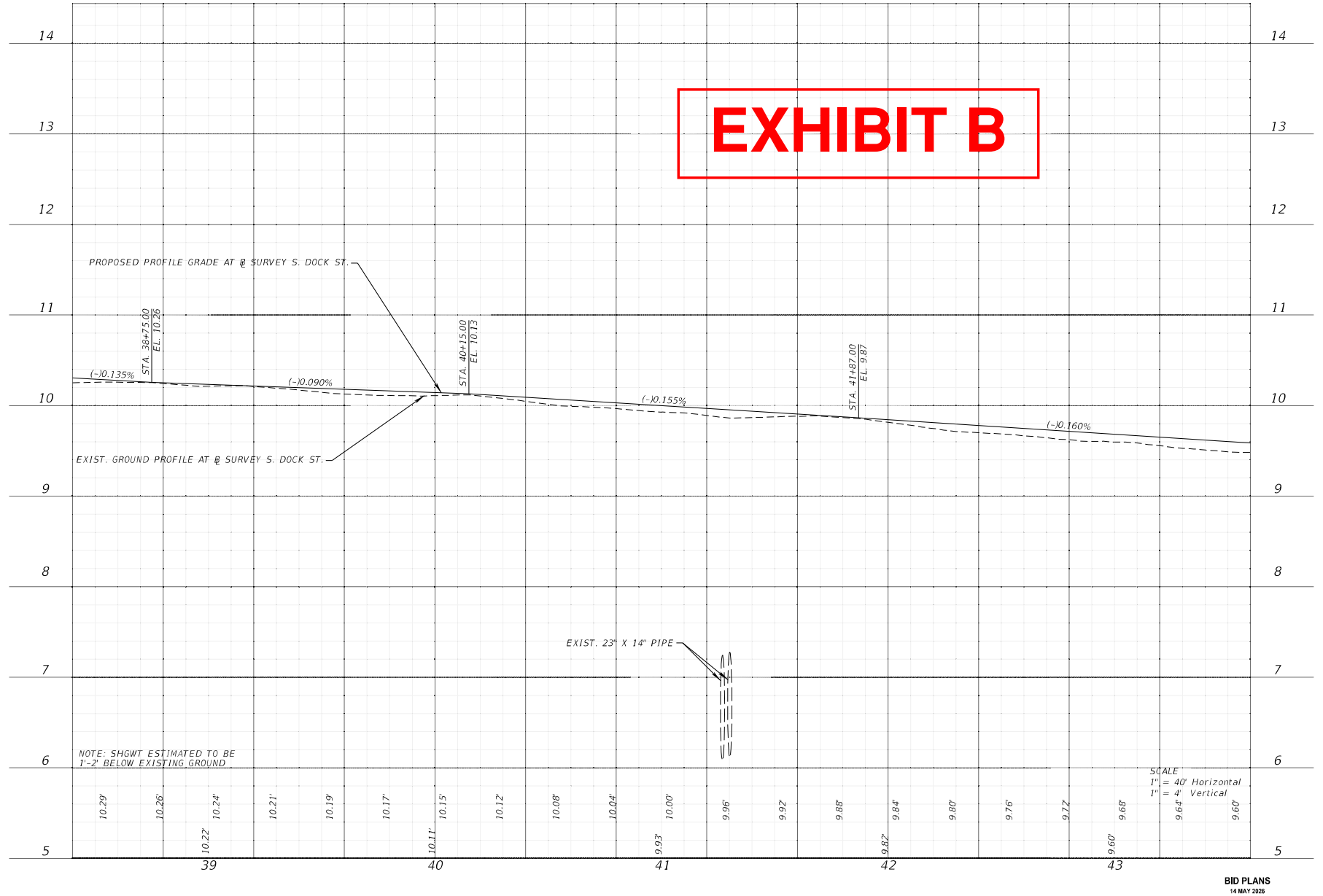

BID PLANS
14 MAY 2026

SEAPORT Manatee
The Agriculture and Seaport Hub

MANATEE COUNTY PORT AUTHORITY
[illegible]

Revision	By	Date

Client/Project
SEAPORT MANATEE
SOUTH DOCK STREET PAVING
MANATEE COUNTY, FLORIDA

ROADWAY PROFILE

RS&H
RS&H, INC.
[illegible]
SUITE 600
TAMPA, FL 33607
813-289-5550

Permit-Seal

MCPA Project Number:	ITB-20260127-5
Project Number:	10044334006
SCALE:	1" = 40'

JEL	AJB	AJB	10.03.25
Dwn.	Chkd.	Dsgn.	MM.DD.YY

Drawing No. C19

Revision	Sheet
0	19 of 80

THE OFFICIAL RECORD OF THIS SHEET IS THE ELECTRONIC FILE INITIALLY SIGNED AND SEALED UNDER RULE 61G15-23.004, F.A.C.

P:\Manatee_Co_Port_Auth\10044334006_GC_South_Dock_Street\Roadway\PROFRD05.dgn : PROFRD05
ByrdA 6/15/2026 11:56:49 AM
ORIGINAL SHEET - 0X11 B

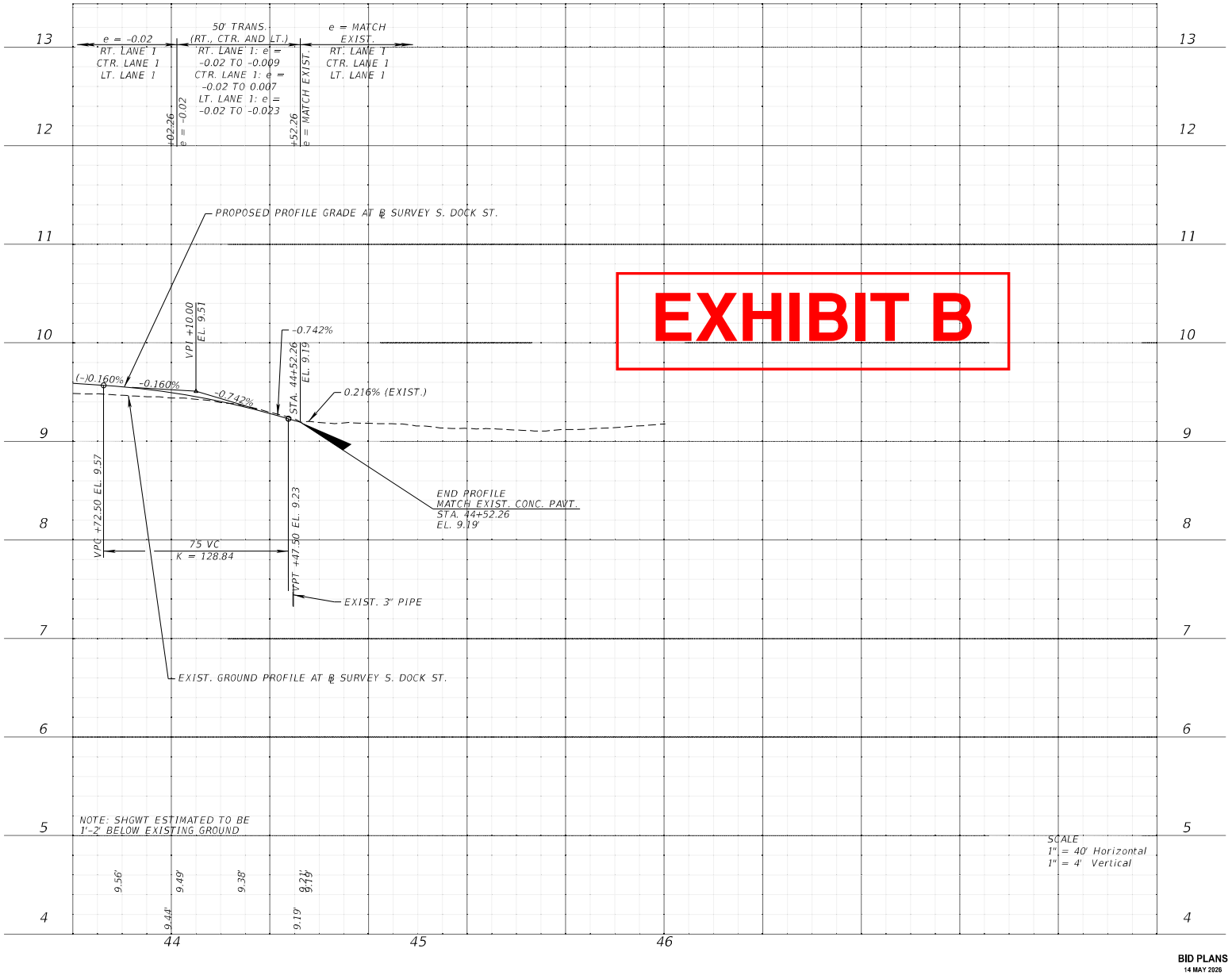

EXHIBIT B

BID PLANS
14 MAY 2026

SEAPORT Manatee
The Right Hand for Tampa Bay

Revision

Client/Project
SEAPORT MANATEE
SOUTH DOCK STREET PAVING
MANATEE COUNTY, FLORIDA

ROADWAY PROFILE

RS&H
RS&H, INC.
1715 N. WESTSHORE BLVD
SUITE 600
TAMPA, FL 33607
813-289-5550

Permit-Seal

MCPA Project Number:	ITB-20260127-5
Project Number:	10044334006
SCALE:	1" = 40'

JEL	AJB	AJB	10.03.25
Dwn.	Chkd.	Dsgn.	MM.DD.YY

Drawing No. C20

Revision 0 Sheet 20 of 80

THE OFFICIAL RECORD OF THIS SHEET IS THE ELECTRONIC FILE INITIALLY SIGNED AND SEALED UNDER RULE 61G15-23.004, F.A.C.

P:\Manatee_Co_Port_Auth\10044334006_GC_South_Dock_Street\Roadway\PROFRD06.dgn : PROFRD06
ByrdA 6/15/2026 11:56:49 AM
ORIGINAL SHEET - ANSI B

EXHIBIT B

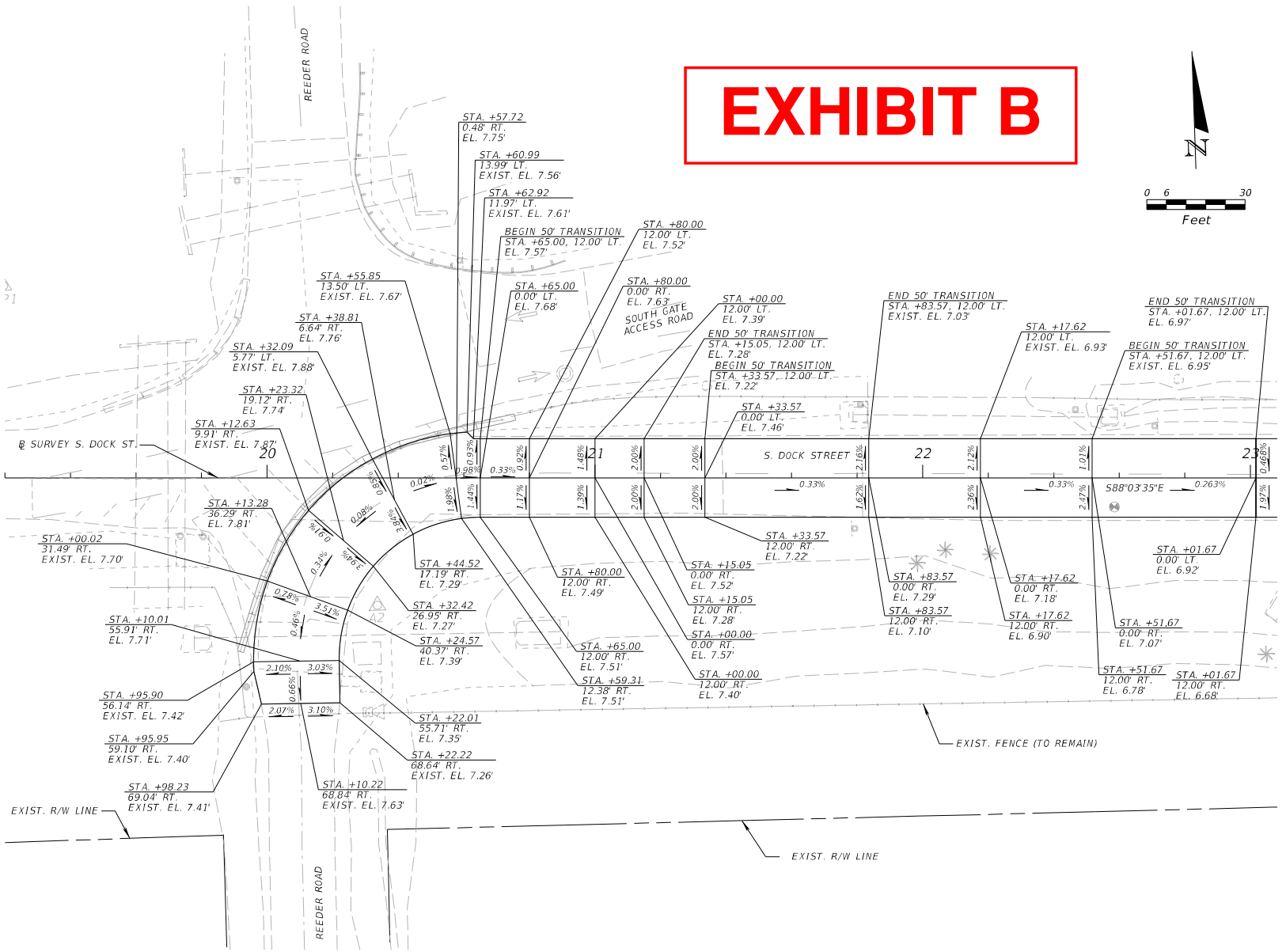

BID PLANS
14 MAY 2026

SEAPORT Manatee

Client/Project
SEAPORT MANATEE
SOUTH DOCK STREET PAVING
MANATEE COUNTY, FLORIDA

GRADING DETAILS

RS&H
RS&H, INC.
1715 N. WESTSHORE BLVD
SUITE 600
TAMPA, FL 33607
813-289-5550

Permit-Seal

MCPA Project Number:	ITB-20260127-5
Project Number:	10044334006
SCALE:	1" = 30'

JEL	AJB	AJB	10.24.25
Dwn.	Chkd.	Dsgn.	MM.DD.YY

Drawing No. C21

Revision	Sheet
0	21 of 80

THE OFFICIAL RECORD OF THIS SHEET IS THE ELECTRONIC FILE INITIALLY SIGNED AND SEALED UNDER RULE 61G15-23.004, F.A.C.

P:\Manatee_Co_Port_Auth\10044334006_GC_South_Dock_Street\Roadway\SPDTRD01.dgn : SPDTRD01
ByrdA 6/15/2026 11:56:51 AM
ORIGINAL SHEET - ANSI B

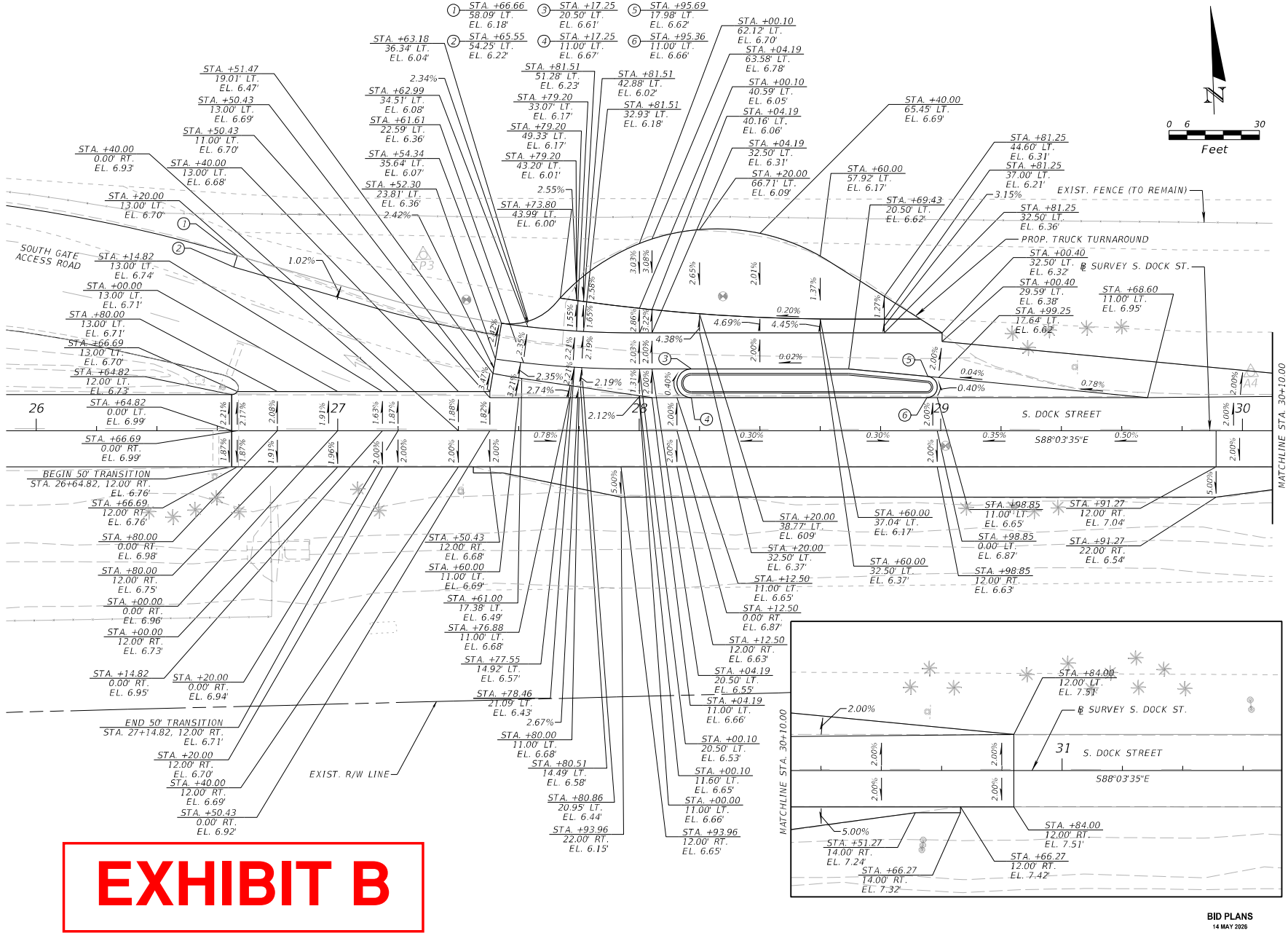

EXHIBIT B

BID PLANS
14 MAY 2026

SEAPORT Manatee

Client/Project
SEAPORT MANATEE
SOUTH DOCK STREET PAVING
MANATEE COUNTY, FLORIDA

GRADING DETAILS

RS&H

RS&H, INC.
1715 N. WESTSHORE BLVD
SUITE 600
TAMPA, FL 33607
813-289-5550

Permit-Seal

MCPA Project Number:	ITB-20260127-5
Project Number:	10044334006
SCALE:	1" = 30'

JEL	AJB	AJB	10.24.25
Dwn.	Chkd.	Dsgn.	MM.DD.YY

Drawing No. C22

Revision	Sheet
0	22 of 80

THE OFFICIAL RECORD OF THIS SHEET IS THE ELECTRONIC FILE INITIALLY SIGNED AND SEALED UNDER RULE 61G15-23.004, F.A.C.

P:\Manatee_Co_Port_Auth\10044334006_GC_South_Dock_Street\Roadway\SPDTRD02.dgn : SPDTRD02
ByrdA 6/15/2026 11:56:54 AM
ORIGINAL SHEET • ANSI B

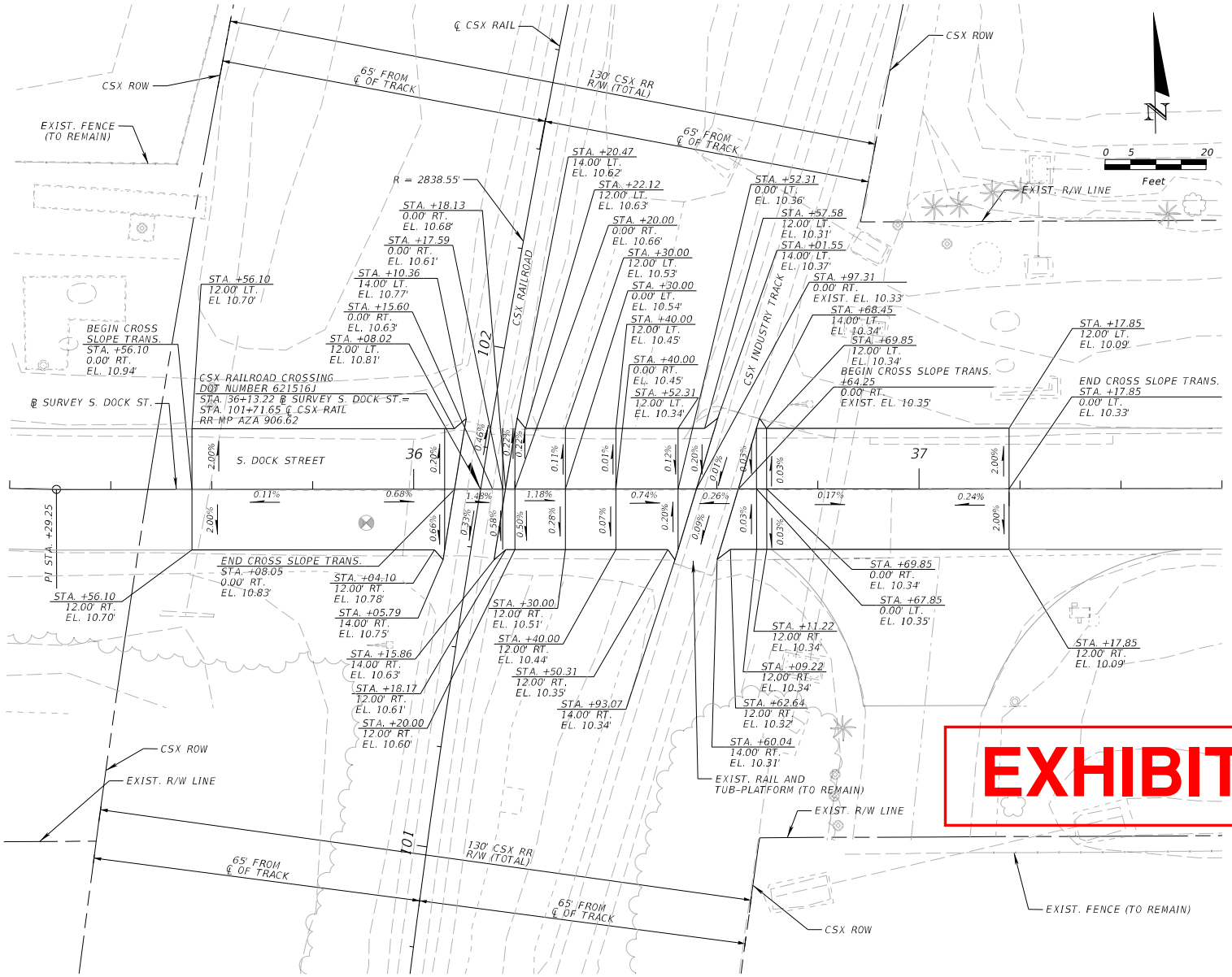

EXHIBIT B

BID PLANS
14 MAY 2026

SEAPORT Manatee

Client/Project
SEAPORT MANATEE
SOUTH DOCK STREET PAVING
MANATEE COUNTY, FLORIDA

GRADING DETAILS

RS&H
RS&H, INC.
1715 N. WESTSHORE BLVD.
SUITE 600
TAMPA, FL 33607
813-289-5550

Permit-Seal

MCPA Project Number:	ITB-20260127-5
Project Number:	10044334006
SCALE:	1" = 20'

JEL	AJB	AJB	10.21.25
Dwn.	Chkd.	Dsgn.	MM.DD.YY

Drawing No. C23

Revision 0 Sheet 23 of 80

THE OFFICIAL RECORD OF THIS SHEET IS THE ELECTRONIC FILE INITIALLY SIGNED AND SEALED UNDER RULE 61G15-23.004, F.A.C.

P:\Manatee_Co_Port_Auth\10044334006_GC_South_Dock_Street\Roadway\SPDTRD03.dgn : SPDTRD03
ByrdA 6/15/2026 11:57:01 AM
ORIGINAL SHEET - ANSI B

EXHIBIT B

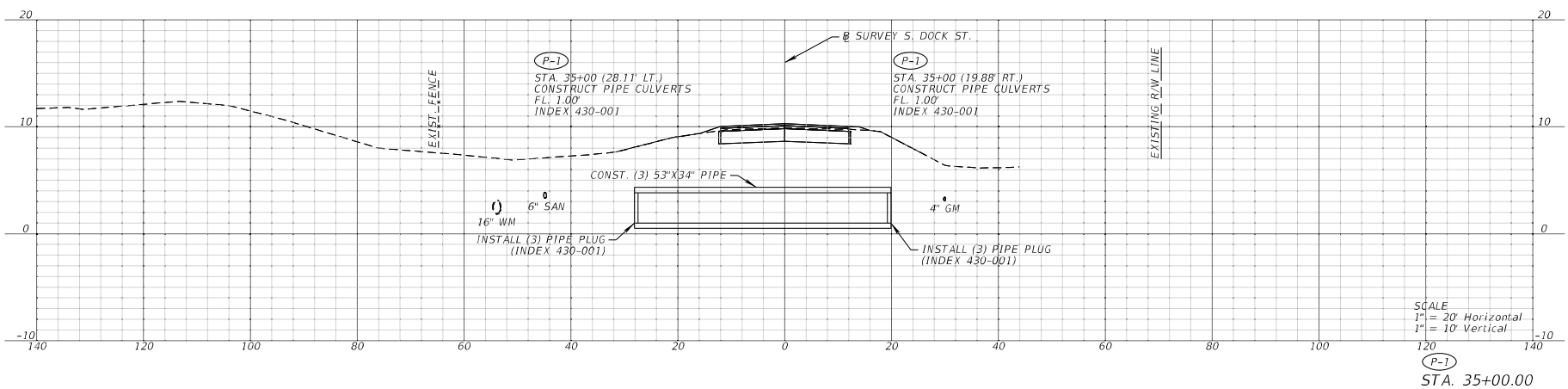

BID PLANS
14 MAY 2026

SEAPORT Manatee
The right turn on Tampa Bay

MANATEE COUNTY PORT AUTHORITY
[illegible]

Revision	By	Date

Client/Project
SEAPORT MANATEE
SOUTH DOCK STREET PAVING
MANATEE COUNTY, FLORIDA

DRAINAGE STRUCTURES

RS&H
RS&H, INC.
[illegible]
SUITE 606
TAMPA, FL 33607
813-289-5550

Permit-Seal

MCPA Project Number:	ITB-20260127-5
Project Number:	10044334006
SCALE:	1" = 20'

SNM	AJB	AJB	10.30.25
Dwn.	Chkd.	Dsgn.	MM.DD.YY

Drawing No. C24

Revision	Sheet
0	24 of 80

THE OFFICIAL RECORD OF THIS SHEET IS THE ELECTRONIC FILE INITIALLY SIGNED AND SEALED UNDER RULE 61G15-23.004, F.A.C.

P:\Manatee_Co_Port_Auth\10044334006_GC_South_Dock_Street\Drainage\DRXSRD01.dgn : DRXSRD01 [SHEET]
ByrdA 6/15/2026 11:57:09 AM
ORIGINAL SHEET - ANSI B

EXHIBIT B

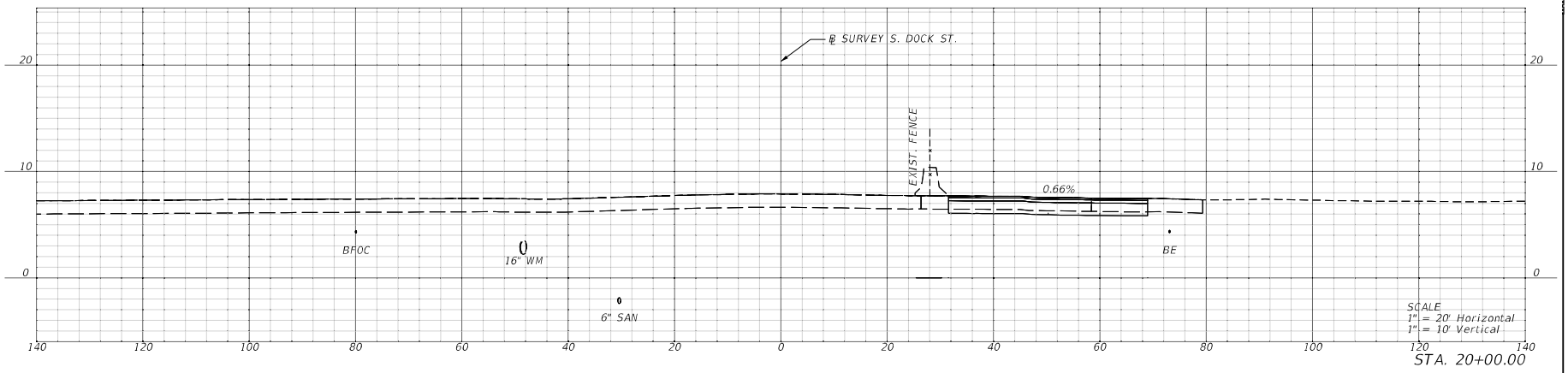

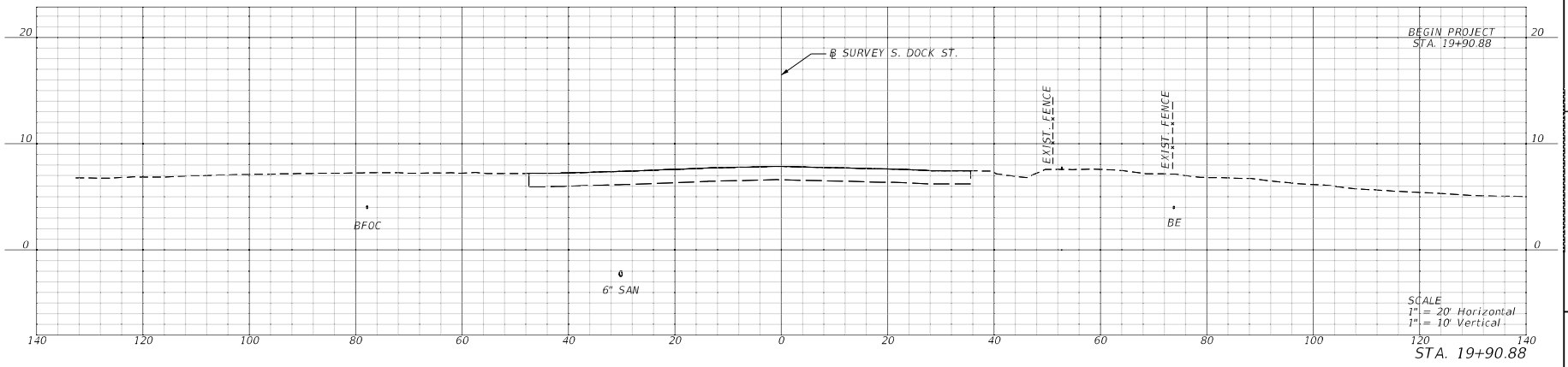

BID PLANS
14 MAY 2026

SEAPORT Manatee
The Agency on Tampa Bay

Revision

Client/Project
SEAPORT MANATEE
SOUTH DOCK STREET PAVING
MANATEE COUNTY, FLORIDA

CROSS SECTIONS

RS&H
RS&H, INC.
1715 N. WESTSHORE BLVD
SUITE 600
TAMPA, FL 33607
813-289-5550

Permit-Seal

MCPA Project Number:	ITB-20260127-5
Project Number:	10044334006
SCALE:	1" = 20'

SNM	AJB	AJB	10.29.25
Dwn.	Chkd.	Dsgn.	MM.DD.YY

Drawing No. C25

Revision 0 Sheet 25 of 80

THE OFFICIAL RECORD OF THIS SHEET IS THE ELECTRONIC FILE INITIALLY SIGNED AND SEALED UNDER RULE 61G15-23.004, F.A.C.

P:\Manatee_Co_Port_Auth\10044334006_GC_South_Dock_Street\Roadway\RDXSRD01.dgn : RDXSRD01
ByrdA 6/15/2026 11:57:20 AM
ORIGINAL SHEET - ANSI B

EXHIBIT B

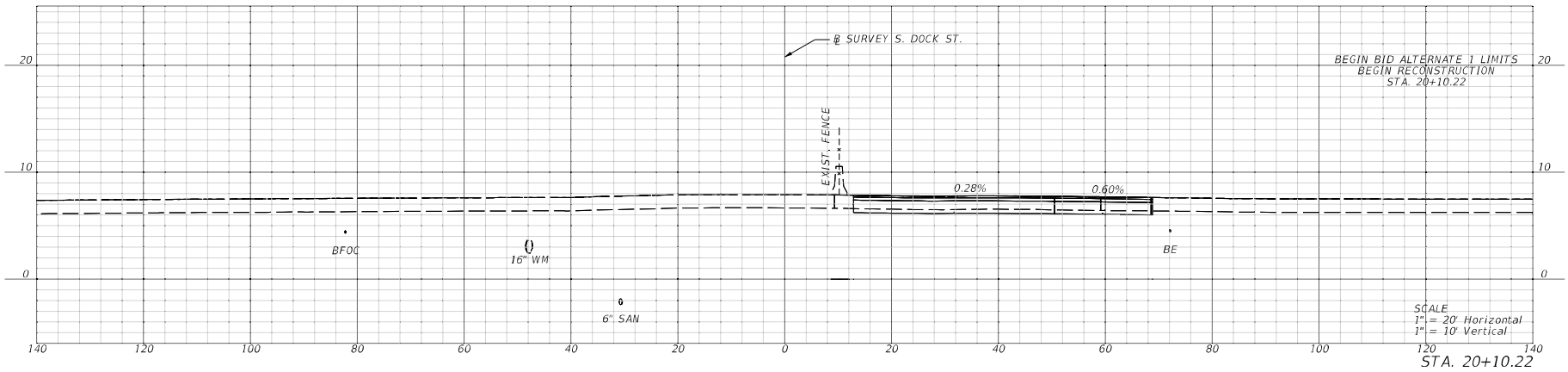

BID PLANS
14 MAY 2026

SEAPORT Manatee

Client/Project
SEAPORT MANATEE
SOUTH DOCK STREET PAVING
MANATEE COUNTY, FLORIDA

CROSS SECTIONS

Revision

RS&H

RS&H, INC.
1715 N. WESTSHORE BLVD
SUITE 600
TAMPA, FL 33607
813-289-5550

Permit-Seal

MCPA Project Number:	ITB-20260127-5
Project Number:	10044334006
SCALE:	1" = 20'

SNM	AJB	AJB	10.29.25
Dwn.	Chkd.	Dsgn.	MM.DD.YY

Drawing No. C26

Revision 0 Sheet 26 of 80

THE OFFICIAL RECORD OF THIS SHEET IS THE ELECTRONIC FILE INITIALLY SIGNED AND SEALED UNDER RULE 61G15-23.004, F.A.C.

P:\Manatee_Co_Port_Auth\10044334006_GC_South_Dock_Street\Roadway\RDXSRD01.dgn : RDXSRD01
ByrdA 6/15/2026 11:57:20 AM
ORIGINAL SHEET - ANSI B

EXHIBIT B

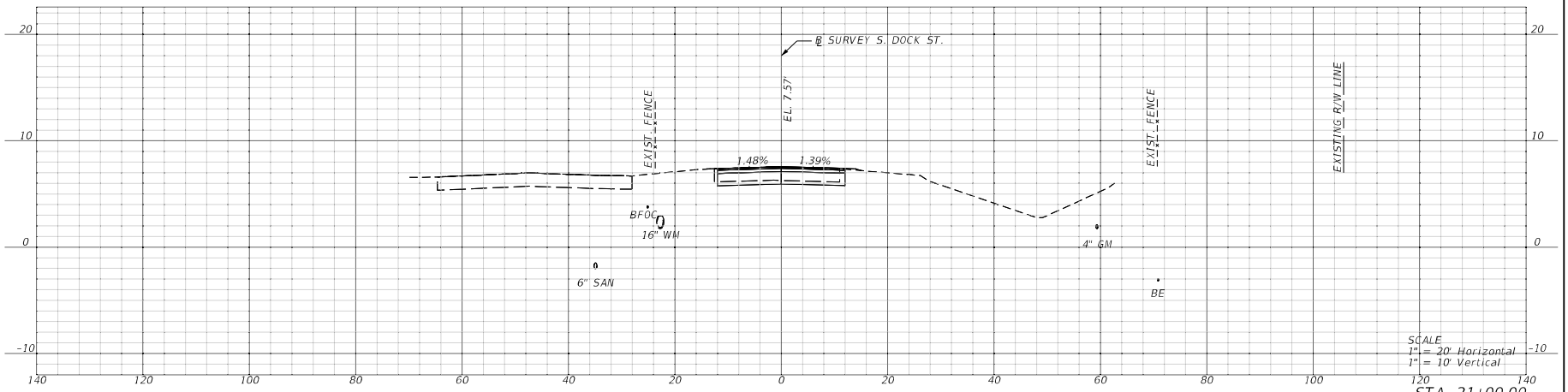

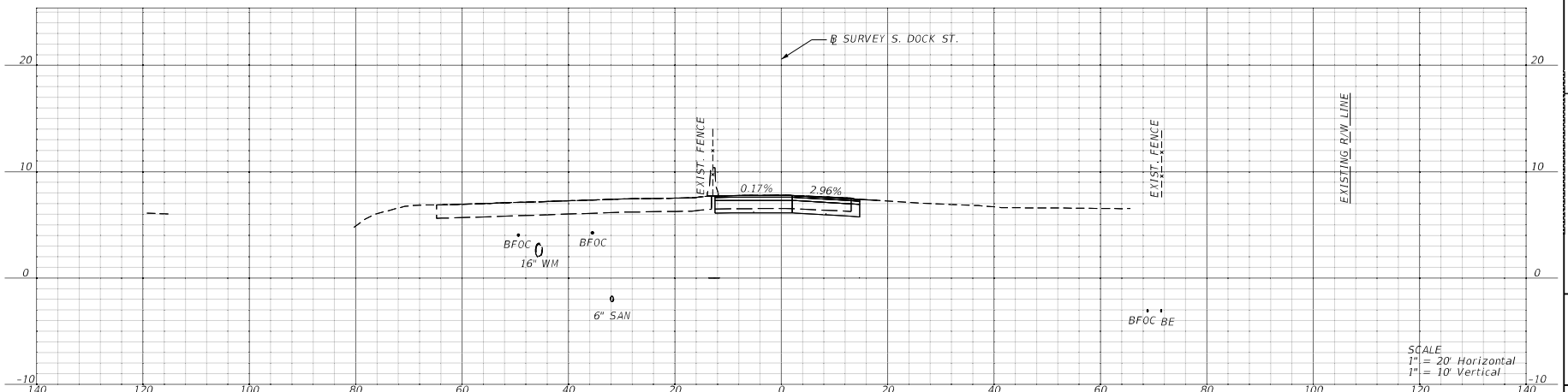

BID PLANS
14 MAY 2026

SEAPORT Manatee

Revision

Client/Project
SEAPORT MANATEE
SOUTH DOCK STREET PAVING
MANATEE COUNTY, FLORIDA

CROSS SECTIONS

RS&H

RS&H, INC.
1715 N. WESTSHORE BLVD.
SUITE 600
TAMPA, FL 33607
813-289-5550

Permit-Seal

MCPA Project Number:	ITB-20260127-5
Project Number:	10044334006
SCALE:	1" = 20'

SNM	AJB	AJB	10.29.25
Dwn.	Chkd.	Dsgn.	MM.DD.YY

Drawing No. C27

Revision 0 Sheet 27 of 80

THE OFFICIAL RECORD OF THIS SHEET IS THE ELECTRONIC FILE INITIALLY SIGNED AND SEALED UNDER RULE 61G15-23.004, F.A.C.

P:\Manatee_Co_Port_Auth\10044334006_GC_South_Dock_Street\Roadway\RDXSRD01.dgn : RDXSRD01
ByrdA 6/15/2026 11:57:21 AM
ORIGINAL SHEET - ANSI B

EXHIBIT B

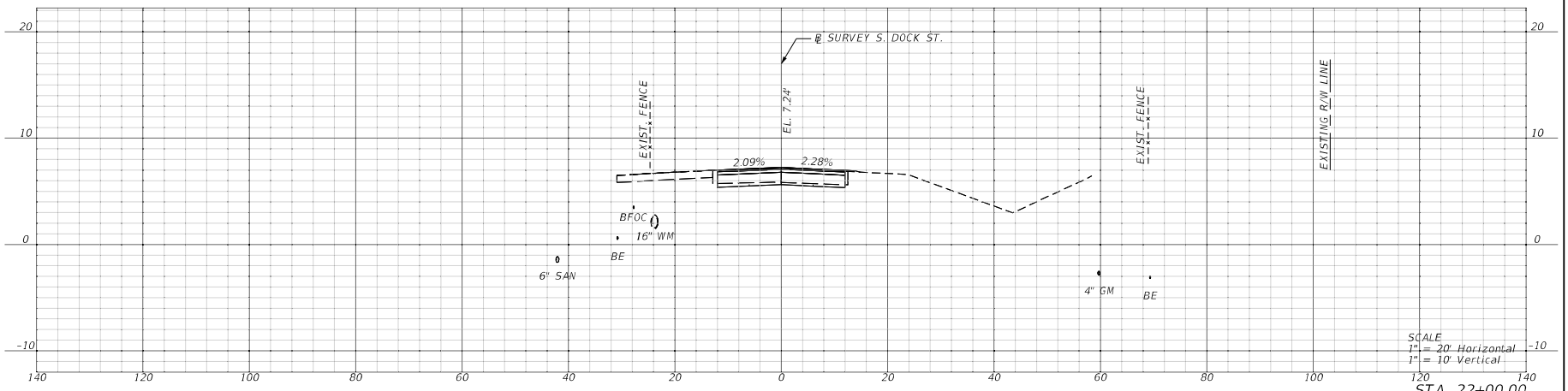

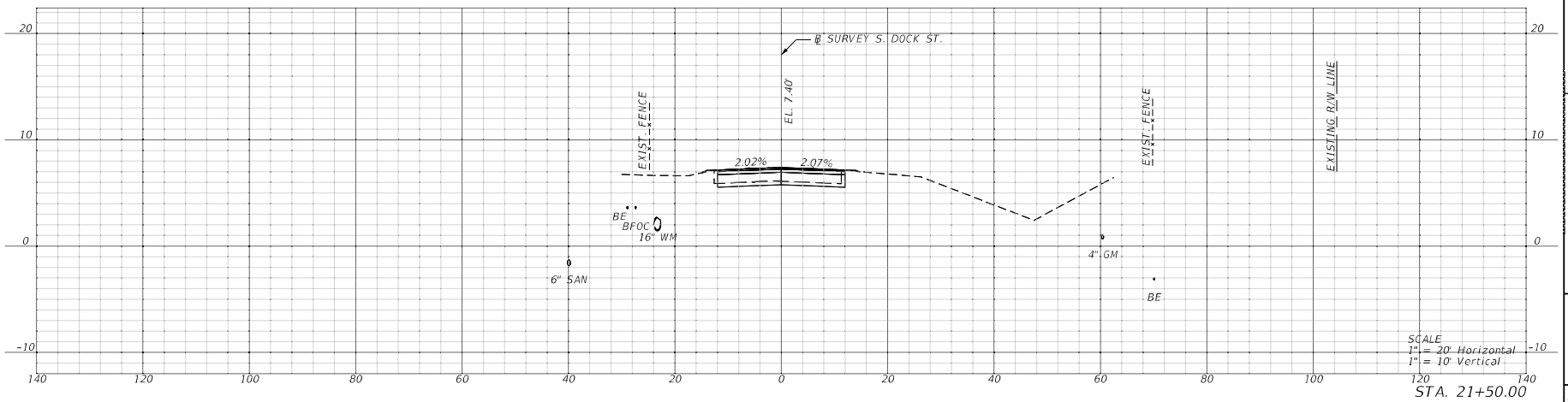

BID PLANS
14 MAY 2026

SEAPORT Manatee

Client/Project
SEAPORT MANATEE
SOUTH DOCK STREET PAVING
MANATEE COUNTY, FLORIDA

CROSS SECTIONS

RS&H

RS&H, INC.
1715 N. WESTSHORE BLVD.
SUITE 600
TAMPA, FL 33607
813-289-5550

Permit-Seal

MCPA Project Number:	ITB-20260127-5
Project Number:	10044334006
SCALE:	1" = 20'

SNM	AJB	AJB	10.29.25
Dwn.	Chkd.	Dsgn.	MM.DD.YY

Drawing No. C28

Revision 0 Sheet 28 of 80

THE OFFICIAL RECORD OF THIS SHEET IS THE ELECTRONIC FILE INITIALLY SIGNED AND SEALED UNDER RULE 61G15-23.004, F.A.C.

P:\Manatee_Co_Port_Auth\10044334006_GC_South_Dock_Street\Roadway\RDXSRD01.dgn : RDXSRD01
ByrdA 6/15/2026 11:57:22 AM
ORIGINAL SHEET - 8X11.8

EXHIBIT B

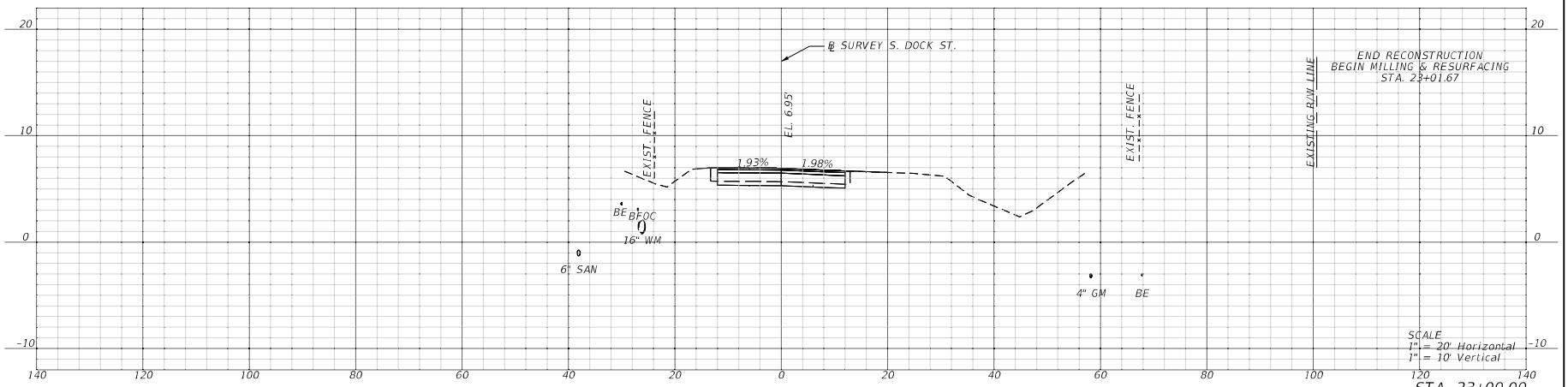

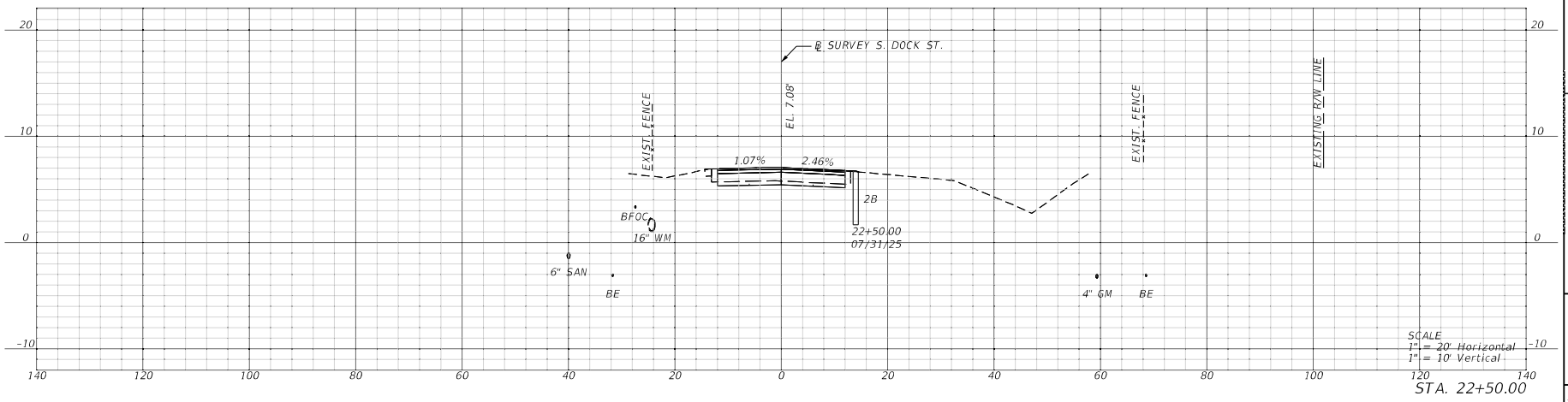

BID PLANS
14 MAY 2026

SEAPORT Manatee
The Agency for Manatee Bay

MANATEE COUNTY PORT AUTHORITY
[illegible]

Revision	By	Date

Client/Project
SEAPORT MANATEE
SOUTH DOCK STREET PAVING
MANATEE COUNTY, FLORIDA

CROSS SECTIONS

RS&H
RS&H, INC.
[illegible]
SUITE 600
TAMPA, FL 33607
813-289-5550

Permit-Seal

MCPA Project Number:	ITB-20260127-5
Project Number:	10044334006
SCALE:	1" = 20'

SNM	AJB	AJB	10.29.25
Dwn.	Chkd.	Dsgn.	MM.DD.YY

Drawing No. C29

Revision	Sheet
0	29 of 80

THE OFFICIAL RECORD OF THIS SHEET IS THE ELECTRONIC FILE INITIALLY SIGNED AND SEALED UNDER RULE 61G15-23.004, F.A.C.

P:\Manatee_Co_Port_Auth\10044334006_GC_South_Dock_Street\Roadway\RDXSRD01.dgn : RDXSRD01
ByrdA 6/15/2026 11:57:24 AM
ORIGINAL SHEET • 6X11 B

EXHIBIT B

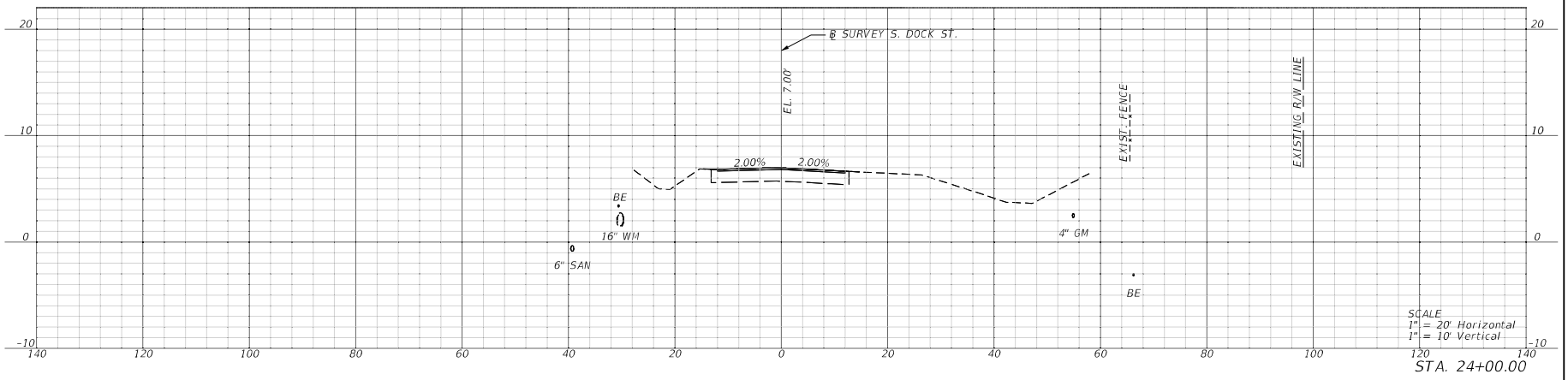

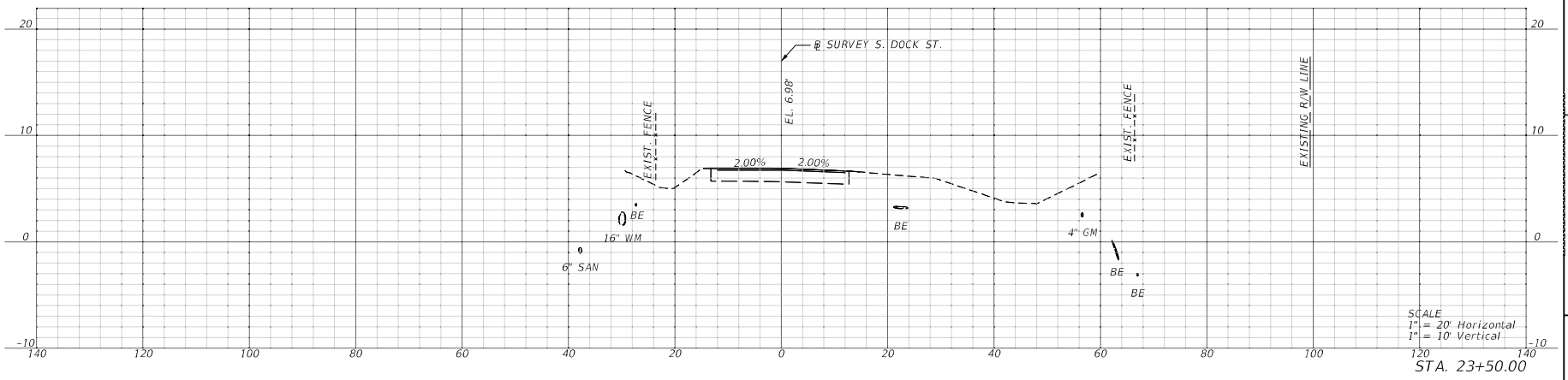

BID PLANS
14 MAY 2026

SEAPORT Manatee

Revision

Client/Project
SEAPORT MANATEE
SOUTH DOCK STREET PAVING
MANATEE COUNTY, FLORIDA

CROSS SECTIONS

RS&H
RS&H, INC.
TAMPA, FL 33607
813-289-5550

Permit-Seal

MCPA Project Number:	ITB-20260127-5
Project Number:	100443340006
SCALES:	1" = 20'

SNM	AJB	AJB	10.29.25
Dwn.	Chkd.	Dsgn.	MM.DD.YY

Drawing No. C30

Revision	Sheet
0	30 of 80

THE OFFICIAL RECORD OF THIS SHEET IS THE ELECTRONIC FILE ORIGINALLY SIGNED AND SEALED UNDER RULE 61G15-23.004, F.A.C.

P:\Manatee_Co_Port_Auth\100443340006_Ofc_South_Dock_Street\Roadway\RDXSR001.dgn - RDXSR001
By:mtA
6/15/2026
1:55:25 AM

ORIGINAL SHEET - ANSI B

EXHIBIT B

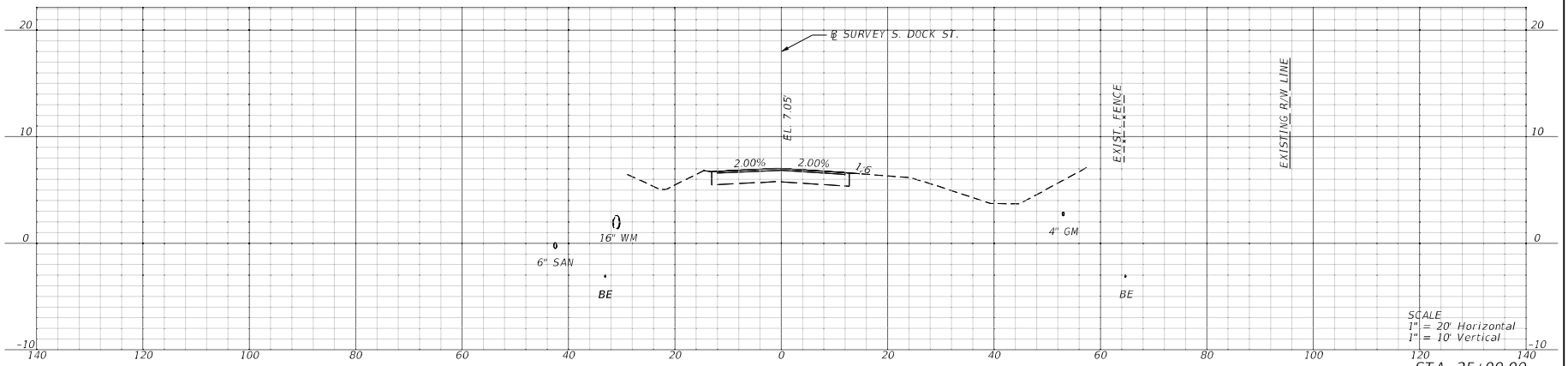

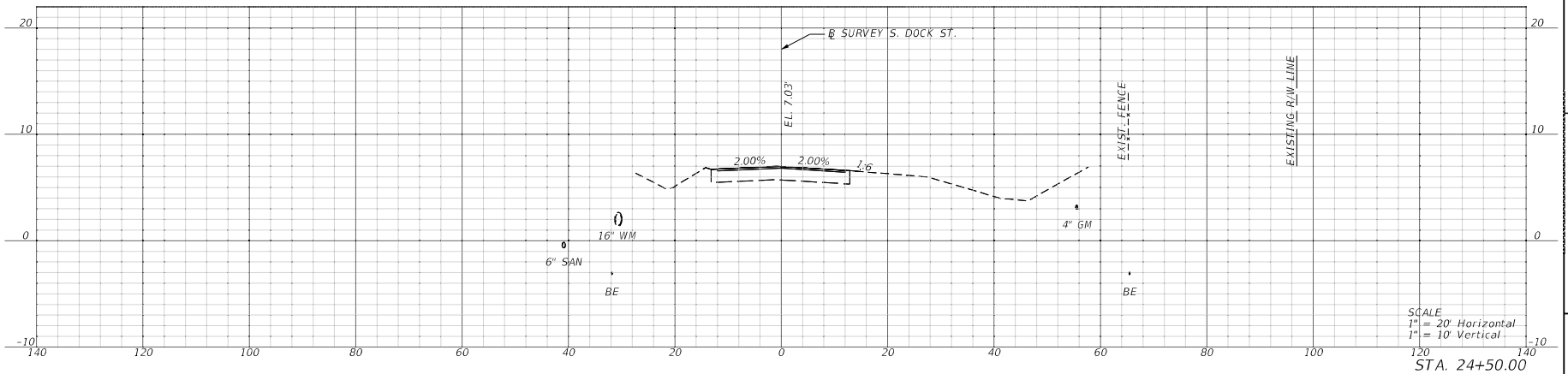

BID PLANS
14 MAY 2026

SEAPORT Manatee

Revision

Client/Project
SEAPORT MANATEE
SOUTH DOCK STREET PAVING
MANATEE COUNTY, FLORIDA

CROSS SECTIONS

RS&H

RS&H, INC.
1715 N. WESTSHORE BLVD
SUITE 600
TAMPA, FL 33607
813-289-5550

Permit-Seal

MCPA Project Number:	ITB-20260127-5
Project Number:	10044334006
SCALE:	1" = 20'

SNM	AJB	AJB	10.29.25
Dwn.	Chkd.	Dsgn.	MM.DD.YY

Drawing No. C31

Revision 0 Sheet 31 of 80

THE OFFICIAL RECORD OF THIS SHEET IS THE ELECTRONIC FILE INITIALLY SIGNED AND SEALED UNDER RULE 61G15-23.004, F.A.C.

P:\Manatee_Co_Port_Auth\10044334006_GC_South_Dock_Street\Roadway\RDXSRD01.dgn : RDXSRD01
ByrdA 6/15/2026 11:57:26 AM
ORIGINAL SHEET - 6X11.R

EXHIBIT B

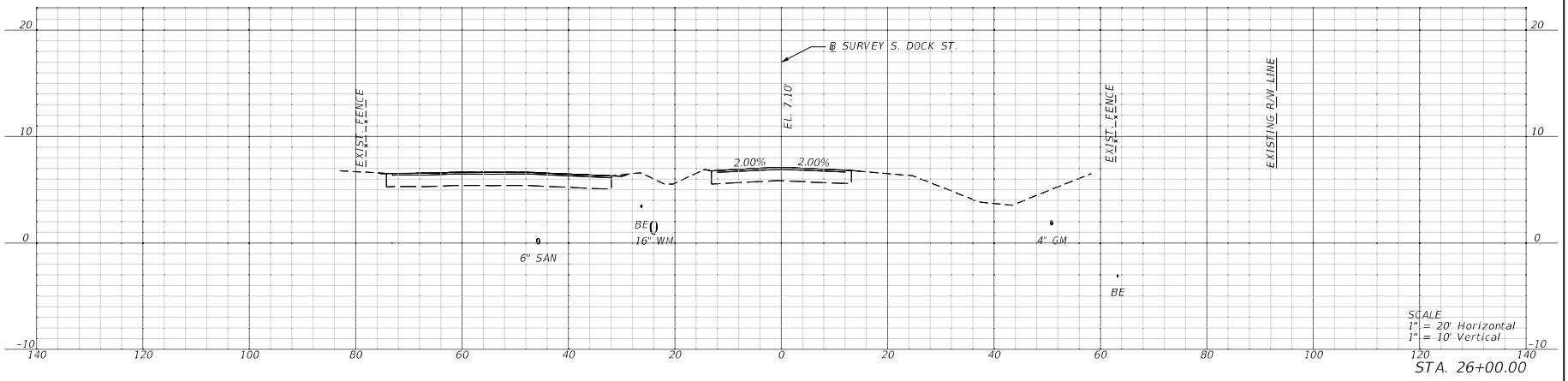

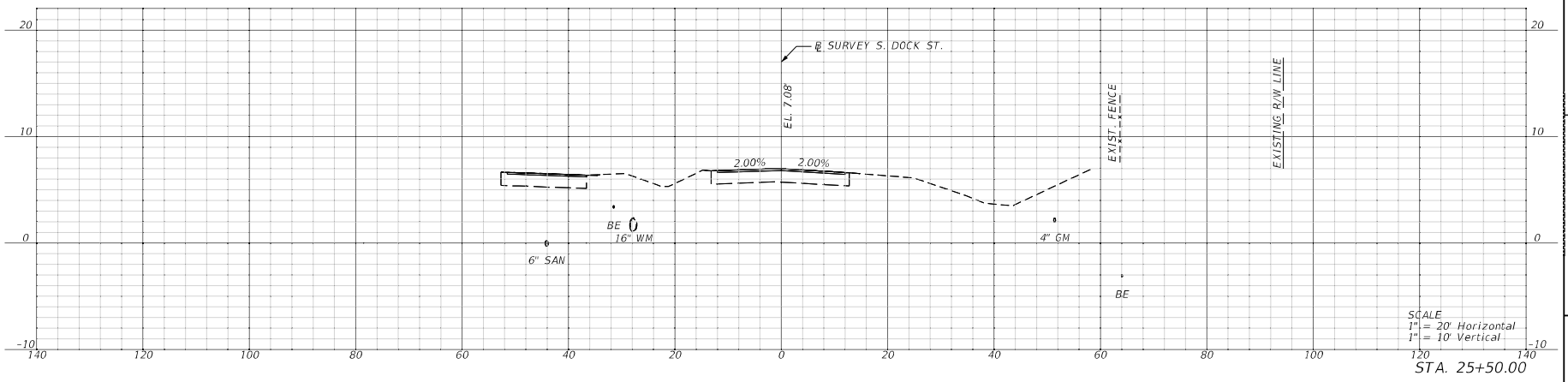

BID PLANS
14 MAY 2026

SEAPORT Manatee

Client/Project
SEAPORT MANATEE
SOUTH DOCK STREET PAVING
MANATEE COUNTY, FLORIDA

CROSS SECTIONS

Revision

RS&H
RS&H, INC.
SUITE 600
TAMPA, FL 33607
813-289-5550

Permit-Seal

MCPA Project Number:	ITB-20260127-5
Project Number:	100443340006
SCALE:	1" = 20'

SNM	AJB	AJB	10.29.25
Dwn.	Chkd.	Dsgn.	MM.DD.YY

Drawing No. C32

Revision	Sheet
0	32 of 80

THE OFFICIAL RECORD OF THIS SHEET IS THE ELECTRONIC FILE ORIGINALLY SIGNED AND SEALED UNDER RULE 61G15-23.004, F.A.C.

P:\Manatee_Co_Port_Auth\100443340006_Gtr_South_Dock_Street\roadway\RDXSHT001.dgn, RDXSHT001
By:mtA
6/15/2026
11:57:27 AM

ORIGINAL SHEET - ANSI B

EXHIBIT B

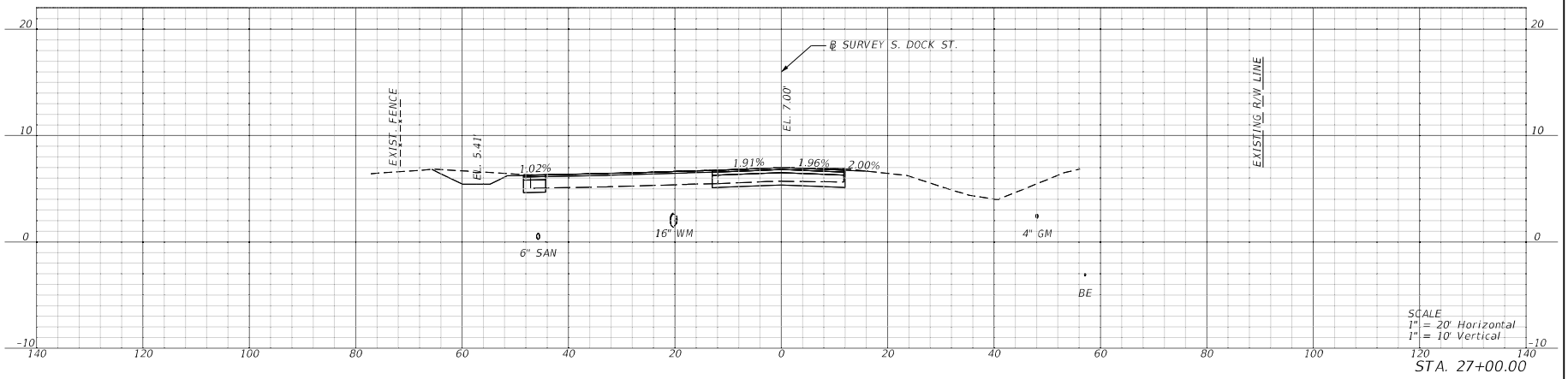

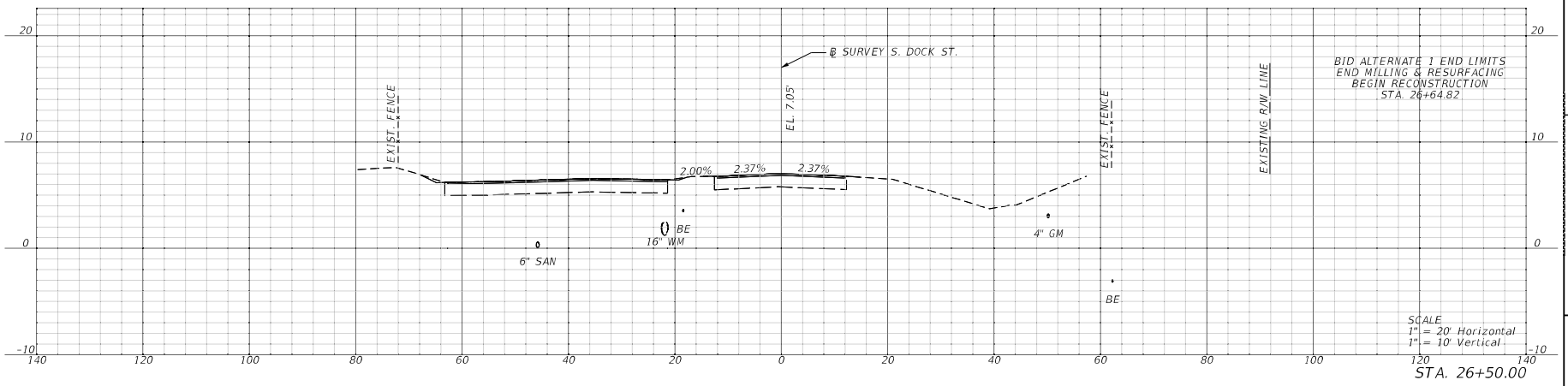

BID PLANS
14 MAY 2026

SEAPORT Manatee

Client/Project
SEAPORT MANATEE
SOUTH DOCK STREET PAVING
MANATEE COUNTY, FLORIDA

CROSS SECTIONS

RS&H

RS&H, INC.
1715 N. WESTSHORE BLVD
SUITE 606
TAMPA, FL 33607
813-289-5550

Permit-Seal

MCPA Project Number:	ITB-20260127-5
Project Number:	10044334006
SCALE:	1" = 20'

SNM	AJB	AJB	10.29.25
Dwn.	Chkd.	Dsgn.	MM.DD.YY

Drawing No. C33

Revision 0 Sheet 33 of 80

THE OFFICIAL RECORD OF THIS SHEET IS THE ELECTRONIC FILE INITIALLY SIGNED AND SEALED UNDER RULE 61G15-23.004, F.A.C.

P:\Manatee_Co_Port_Auth\10044334006_GC_South_Dock_Street\roadway\RDXSRD01.dgn : RDXSRD01
ByrdA 6/15/2026 11:57:28 AM
ORIGINAL SHEET - ANSI B

EXHIBIT B

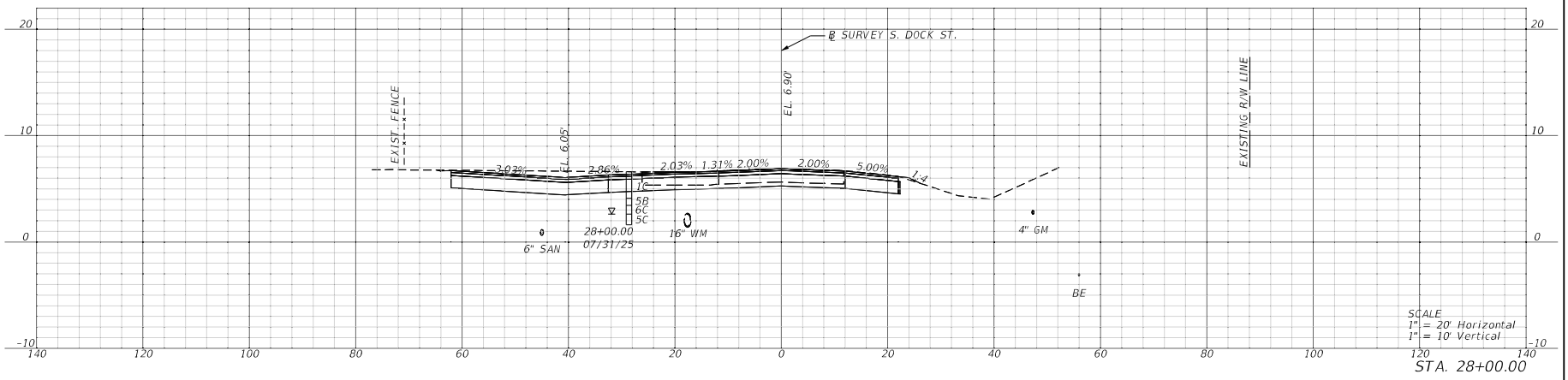

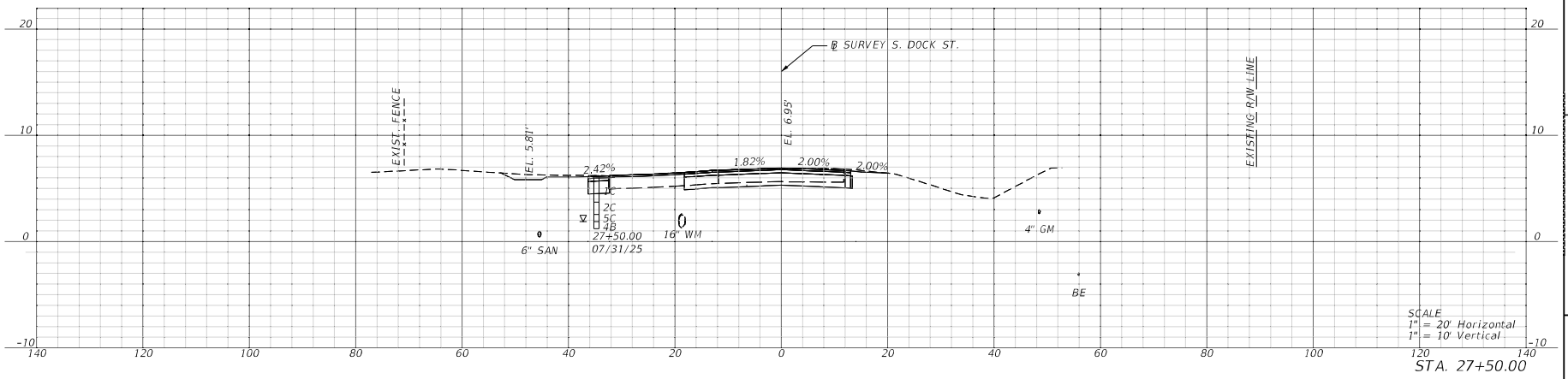

BID PLANS
14 MAY 2026

SEAPORT Manatee
The Agency for the Seaport Bay

Revision

Client/Project
SEAPORT MANATEE
SOUTH DOCK STREET PAVING
MANATEE COUNTY, FLORIDA

CROSS SECTIONS

RS&H
RS&H, INC.
1715 N. WESTSHORE BLVD
SUITE 600
TAMPA, FL 33607
813-289-5550

Permit-Seal

MCPA Project Number:	ITB-20260127-5
Project Number:	10044334006
SCALE:	1" = 20'

SNM	AJB	AJB	10.29.25
Dwn.	Chkd.	Dsgn.	MM.DD.YY

Drawing No. C34

Revision 0 Sheet 34 of 80

THE OFFICIAL RECORD OF THIS SHEET IS THE ELECTRONIC FILE INITIALLY SIGNED AND SEALED UNDER RULE 61G15-23.004, F.A.C.

P:\Manatee_Co_Port_Auth\10044334006_GC_South_Dock_Street\roadway\RDXSRD01.dgn : RDXSRD01
ByrdA 6/15/2026 11:57:29 AM
ORIGINAL SHEET - ANSI B

EXHIBIT B

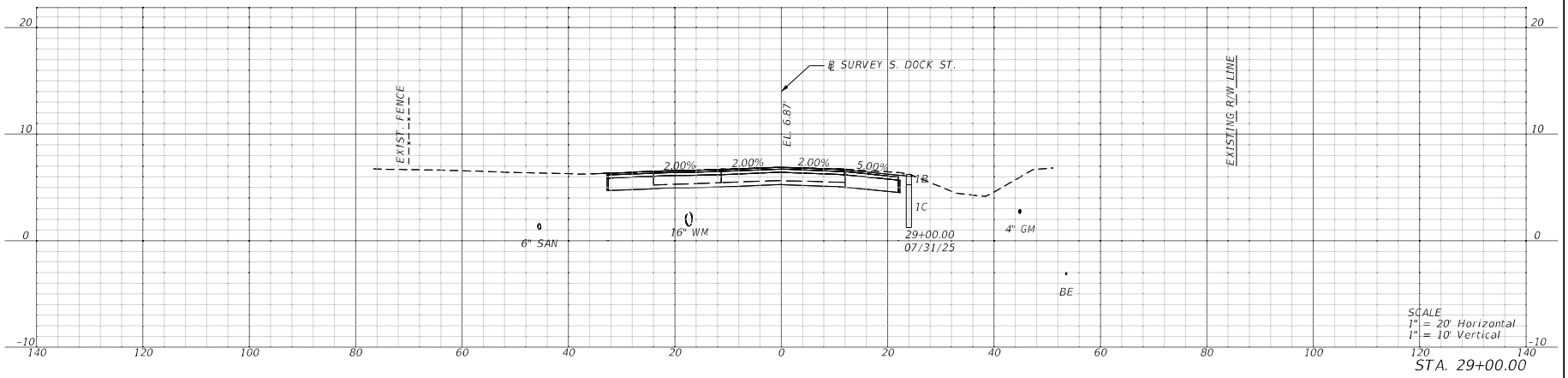

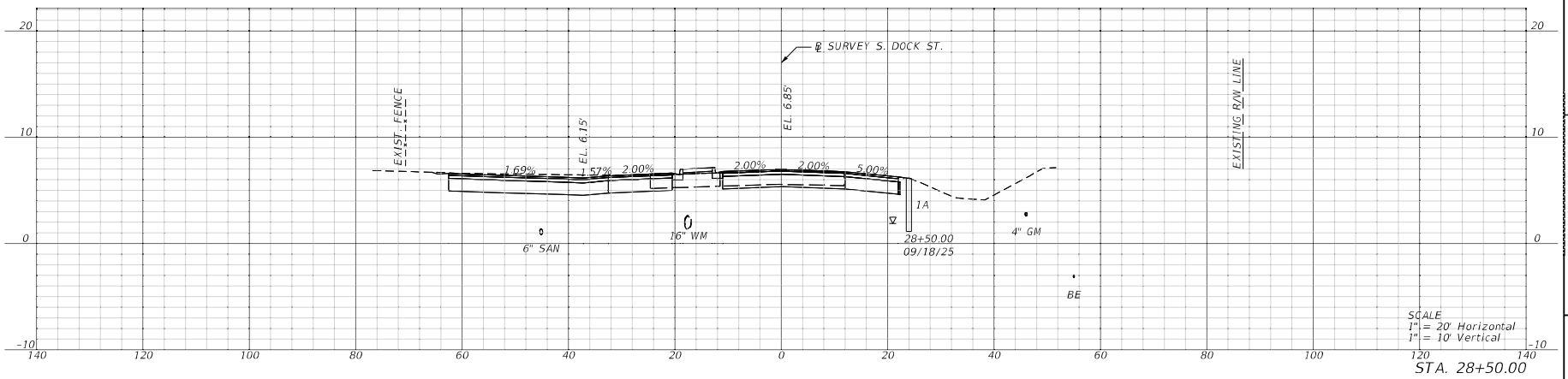

BID PLANS
14 MAY 2026

SEAPORT Manatee
The Right Horn on Tampa Bay

MANATEE COUNTY PORT AUTHORITY
[illegible]

Revision	By	Date

Client/Project
SEAPORT MANATEE
SOUTH DOCK STREET PAVING
MANATEE COUNTY, FLORIDA

CROSS SECTIONS

RS&H
RS&H, INC.
[illegible]
SUITE 600
TAMPA, FL 33607
813-289-5550

Permit-Seal

MCPA Project Number:	ITB-20260127-5
Project Number:	10044334006
SCALE:	1" = 20'

SNM	AJB	AJB	10.29.25
Dwn.	Chkd.	Dsgn.	MM.DD.YY

Drawing No. C35

Revision 0 Sheet 35 of 80

THE OFFICIAL RECORD OF THIS SHEET IS THE ELECTRONIC FILE INITIALLY SIGNED AND SEALED UNDER RULE 61G15-23.004, F.A.C.

P:\Manatee_Co_Port_Auth\10044334006_GC_South_Dock_Street\roadway\RDXSRD01.dgn : RDXSRD01
ByrdA 6/15/2026 11:57:30 AM
ORIGINAL SHEET - 6X18

EXHIBIT B

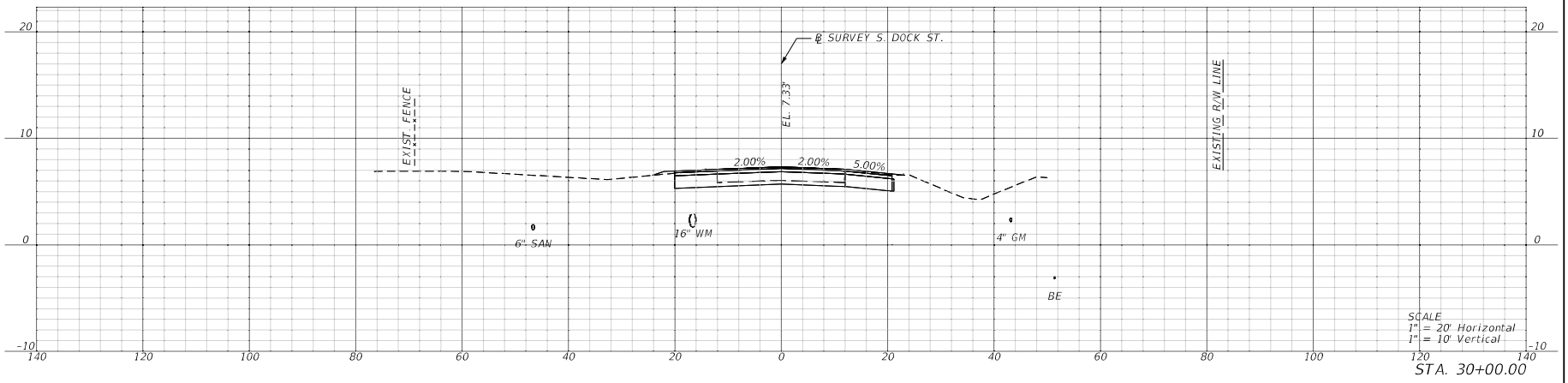

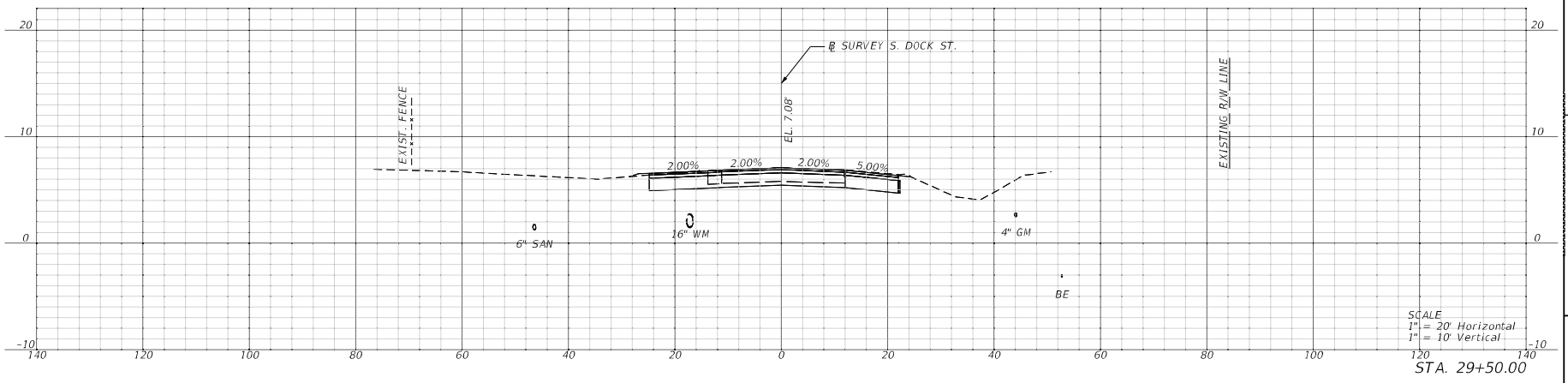

BID PLANS
14 MAY 2026

SEAPORT Manatee

Revision

Client/Project
SEAPORT MANATEE
SOUTH DOCK STREET PAVING
MANATEE COUNTY, FLORIDA

CROSS SECTIONS

RS&H

RS&H, INC.
1715 N. WESTSHORE BLVD
SUITE 600
TAMPA, FL 33607
813-289-5550

Permit-Seal

MCPA Project Number:	ITB-20260127-5
Project Number:	10044334006
SCALE:	1" = 20'

SNM	AJB	AJB	10.29.25
Dwn.	Chkd.	Dsgn.	MM.DD.YY

Drawing No. C36

Revision 0 Sheet 36 of 80

THE OFFICIAL RECORD OF THIS SHEET IS THE ELECTRONIC FILE INITIALLY SIGNED AND SEALED UNDER RULE 61G15-23.004, F.A.C.

P:\Manatee_Co_Port_Auth\10044334006_GC_South_Dock_Street\roadway\RDXSRD01.dgn : RDXSRD01
ByrdA 6/15/2026 11:57:31 AM
ORIGINAL SHEET - 6X11.B

EXHIBIT B

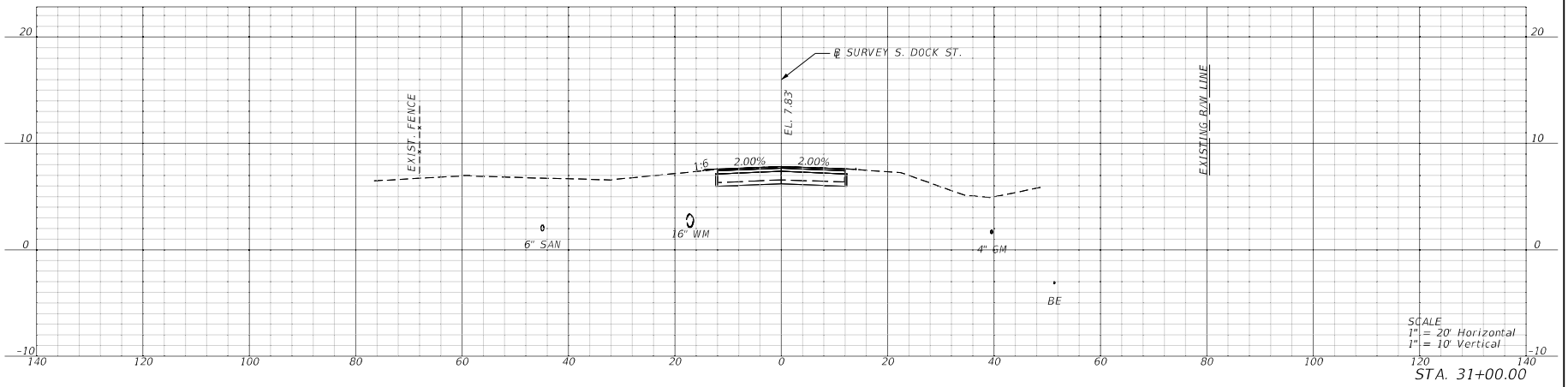

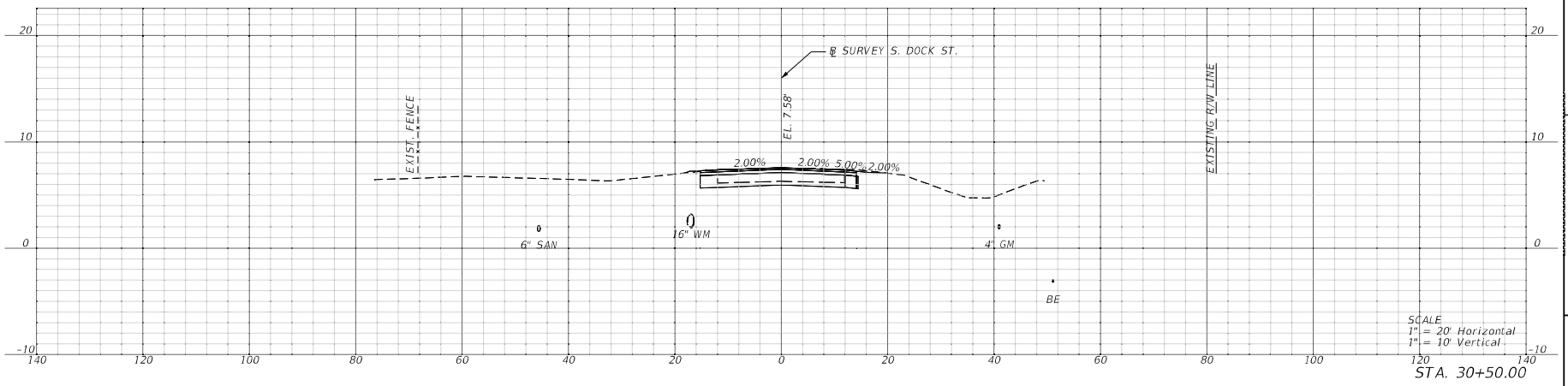

BID PLANS
14 MAY 2026

SEAPORT Manatee
The Agriculture and Seaport Hub

Revision

Client/Project
SEAPORT MANATEE
SOUTH DOCK STREET PAVING
MANATEE COUNTY, FLORIDA

CROSS SECTIONS

RS&H
RS&H, INC.
1715 N. WESTSHORE BLVD
SUITE 600
TAMPA, FL 33607
813-289-5550

Permit-Seal

MCPA Project Number:	ITB-20260127-5
Project Number:	10044334006
SCALE:	1" = 20'

SNM	AJB	AJB	10.29.25
Dwn.	Chkd.	Dsgn.	MM.DD.YY

Drawing No. C37

Revision 0 Sheet 37 of 80

THE OFFICIAL RECORD OF THIS SHEET IS THE ELECTRONIC FILE INITIALLY SIGNED AND SEALED UNDER RULE 61G15-23.004, F.A.C.

P:\Manatee_Co_Port_Auth\10044334006_GC_South_Dock_Street\roadway\RDXSRD01.dgn : RDXSRD01
ByrdA 6/15/2026 11:57:32 AM
ORIGINAL SHEET • 6X11 B

EXHIBIT B

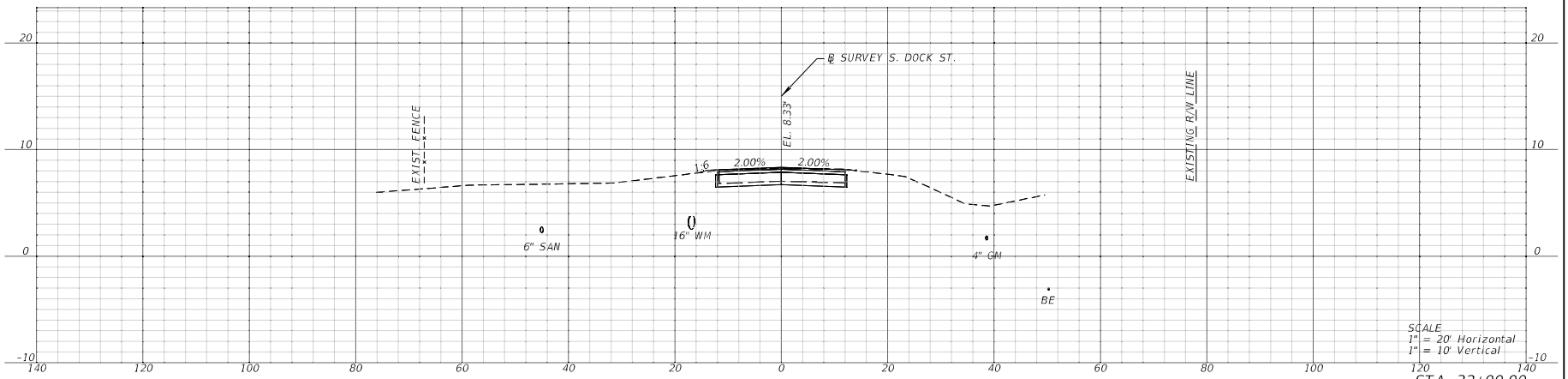

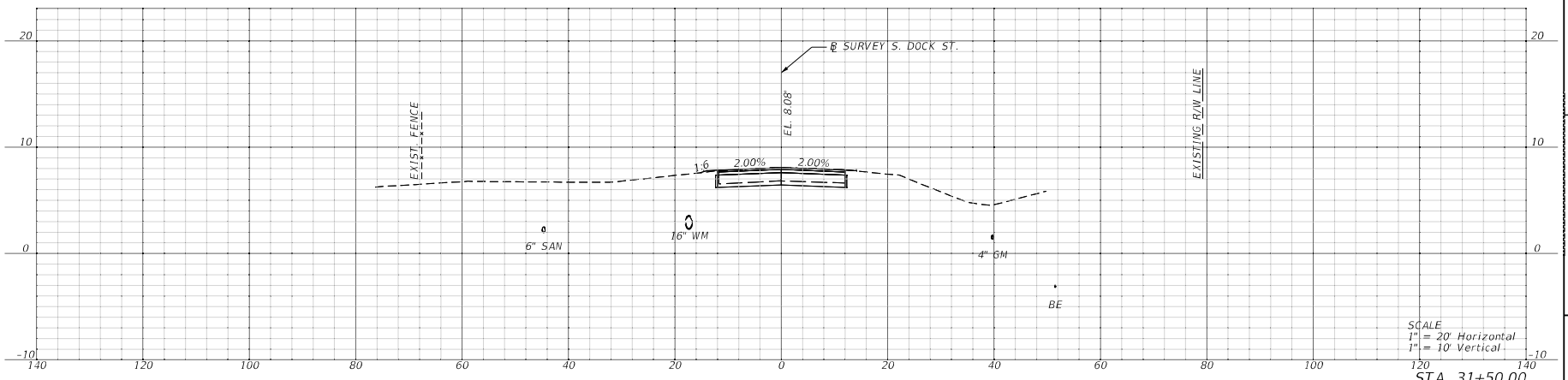

BID PLANS
14 MAY 2026

SEAPORT Manatee
The Agency for Inspiring Trade

Revision

Client/Project
SEAPORT MANATEE
SOUTH DOCK STREET PAVING
MANATEE COUNTY, FLORIDA

CROSS SECTIONS

RS&H
RS&H, INC.
1715 N. WESTSHORE BLVD
SUITE 600
TAMPA, FL 33607
813-289-5550

Permit-Seal

MCPA Project Number:	ITB-20260127-5
Project Number:	10044334006
SCALE:	1" = 20'

SNM	AJB	AJB	10.29.25
Dwn.	Chkd.	Dsgn.	MM.DD.YY

Drawing No. C38

Revision 0 Sheet 38 of 80

THE OFFICIAL RECORD OF THIS SHEET IS THE ELECTRONIC FILE INITIALLY SIGNED AND SEALED UNDER RULE 61G15-23.004, F.A.C.

P:\Manatee_Co_Port_Auth\10044334006_GC_South_Dock_Street\roadway\RDXSRD01.dgn : RDXSRD01
ByrdA 6/15/2026 11:57:33 AM
ORIGINAL SHEET - 8X11 B

EXHIBIT B

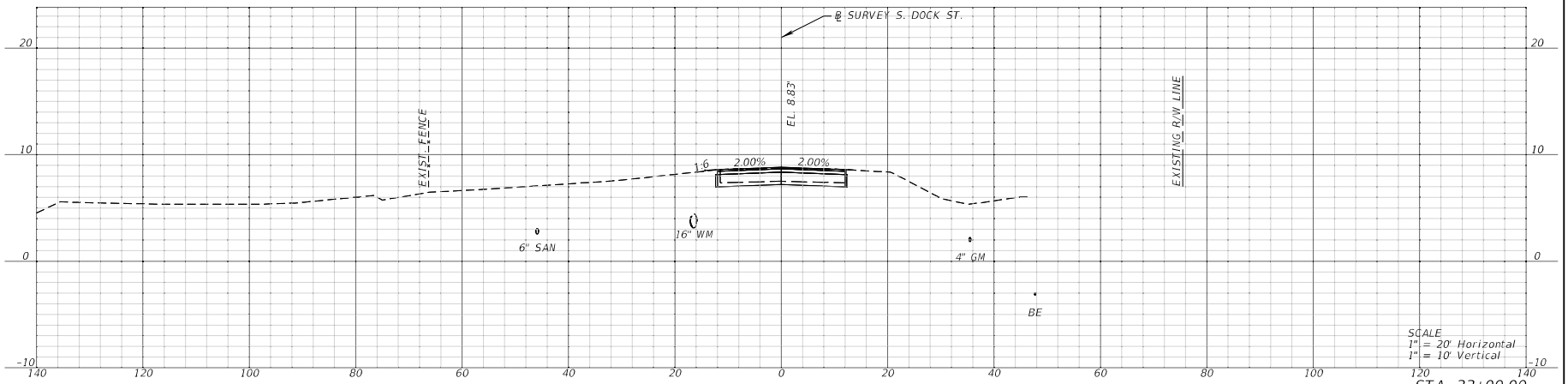

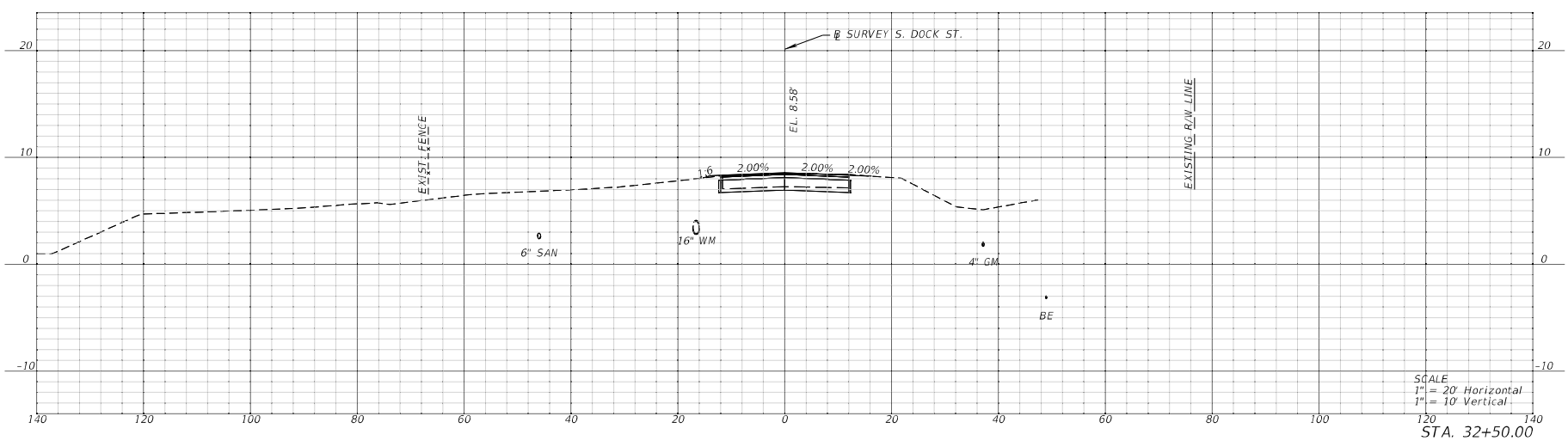

BID PLANS
14 MAY 2026

SEAPORT Manatee
The Agency for Manatee Bay

MANATEE COUNTY PORT AUTHORITY
[illegible]

Revision	By	Date

Client/Project
SEAPORT MANATEE
SOUTH DOCK STREET PAVING
MANATEE COUNTY, FLORIDA

CROSS SECTIONS

RS&H
RS&H, INC.
1715 N. WESTSHORE BLVD
SUITE 600
TAMPA, FL 33607
813-289-5550

Permit-Seal

MCPA Project Number:	ITB-20260127-5
Project Number:	10044334006
SCALE:	1" = 20'

JEL	AJB	AJB	10.29.25
Dwn.	Chkd.	Dsgn.	MM.DD.YY

Drawing No. C39

Revision 0 Sheet 39 of 80

THE OFFICIAL RECORD OF THIS SHEET IS THE ELECTRONIC FILE INITIALLY SIGNED AND SEALED UNDER RULE 61G15-23.004, F.A.C.

P:\Manatee_Co_Port_Auth\10044334006_GC_South_Dock_Street\Roadway\RDXSRD02.dgn : RDXSRD02
ByrdA 6/15/2026 11:57:38 AM
ORIGINAL SHEET • ANSI B

EXHIBIT B

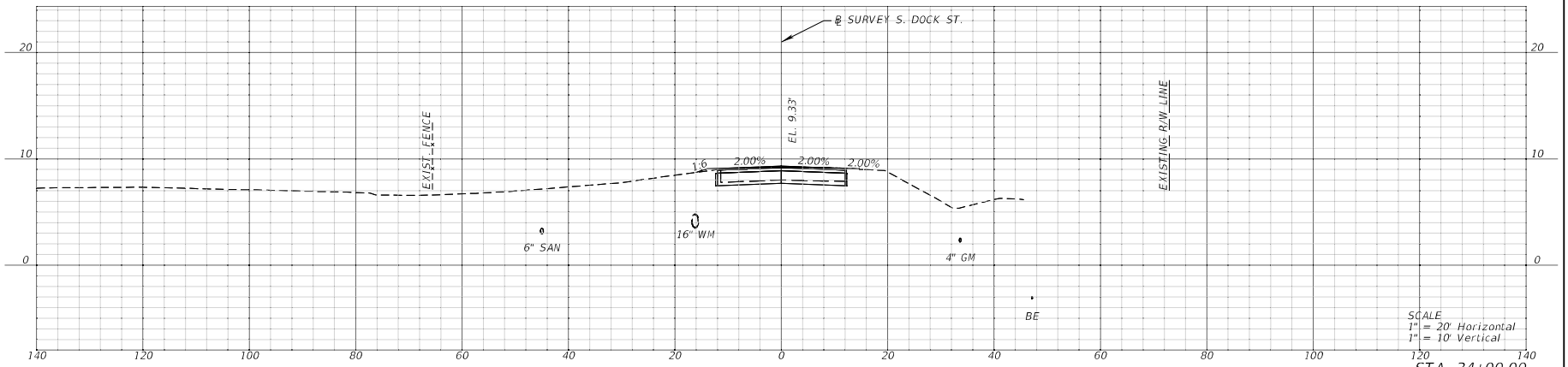

STA. 34+00.00

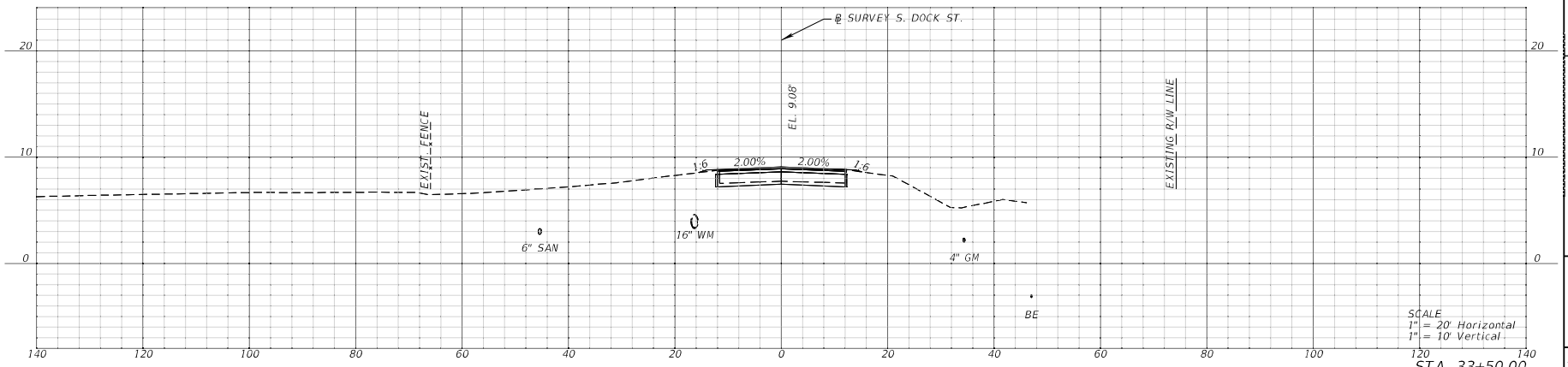

STA. 33+50.00

BID PLANS
14 MAY 2026

SEAPORT Manatee
The Agriculture and Seaport Hub

MANATEE COUNTY PORT AUTHORITY
[illegible]

Revision	By	Date

Client/Project
SEAPORT MANATEE
SOUTH DOCK STREET PAVING
MANATEE COUNTY, FLORIDA

CROSS SECTIONS

RS&H
RS&H, INC.
[illegible]
SUITE 600
TAMPA, FL 33607
813-289-5550

Permit-Seal

MCPA Project Number:	ITB-20260127-5
Project Number:	10044334006
SCALE:	1" = 20'

JEL	AJB	AJB	10.29.25
Dwn.	Chkd.	Dsgn.	MM.DD.YY

Drawing No. C40

Revision	Sheet
0	40 of 80

THE OFFICIAL RECORD OF THIS SHEET IS THE ELECTRONIC FILE INITIALLY SIGNED AND SEALED UNDER RULE 61G15-23.004, F.A.C.

P:\Manatee_Co_Port_Auth\10044334006_GC_South_Dock_Street\Roadway\RDXSRD02.dgn : RDXSRD02
ByrdA 6/15/2026 11:57:40 AM
ORIGINAL SHEET • ANSI B

EXHIBIT B

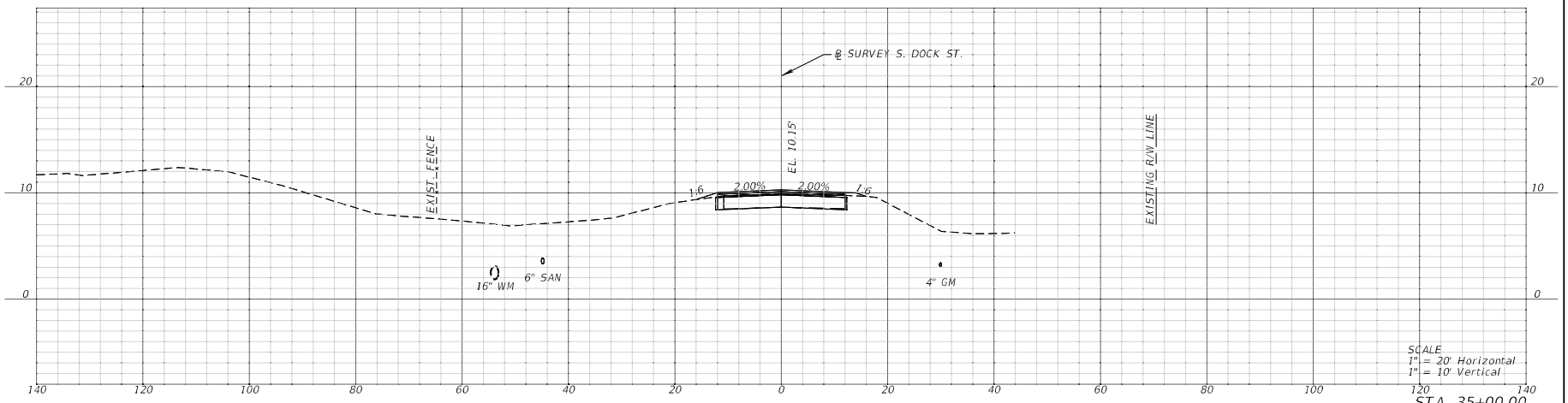

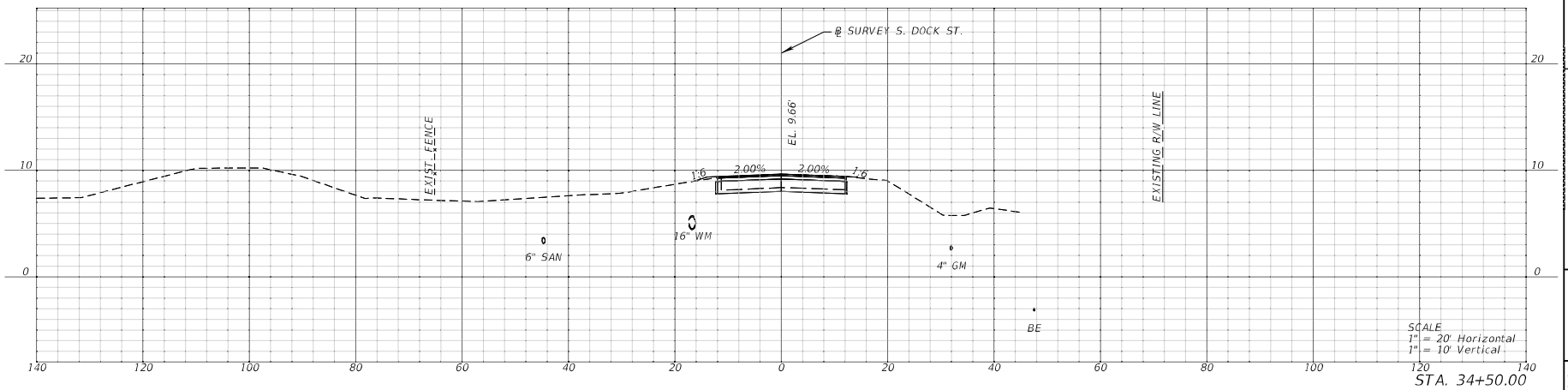

BID PLANS
14 MAY 2026

SEAPORT Manatee
The Agriculture and Seaport Hub

Revision

Client/Project
SEAPORT MANATEE
SOUTH DOCK STREET PAVING
MANATEE COUNTY, FLORIDA

CROSS SECTIONS

RS&H
RS&H, INC.
1715 N. WESTSHORE BLVD.
SUITE 600
TAMPA, FL 33607
813-289-5550

Permit-Seal

MCPA Project Number:	ITB-20260127-5
Project Number:	10044334006
SCALE:	1" = 20'

JEL	AJB	AJB	10.29.25
Dwn.	Chkd.	Dsgn.	MM.DD.YY

Drawing No. C41

Revision 0 Sheet 41 of 80

THE OFFICIAL RECORD OF THIS SHEET IS THE ELECTRONIC FILE INITIALLY SIGNED AND SEALED UNDER RULE 61G15-23.004, F.A.C.

P:\Manatee_Co_Port_Auth\10044334006_GC_South_Dock_Street\Roadway\RDXSRD02.dgn : RDXSRD02
ByrdA 6/15/2026 11:57:41 AM
ORIGINAL SHEET - ANSI B

EXHIBIT B

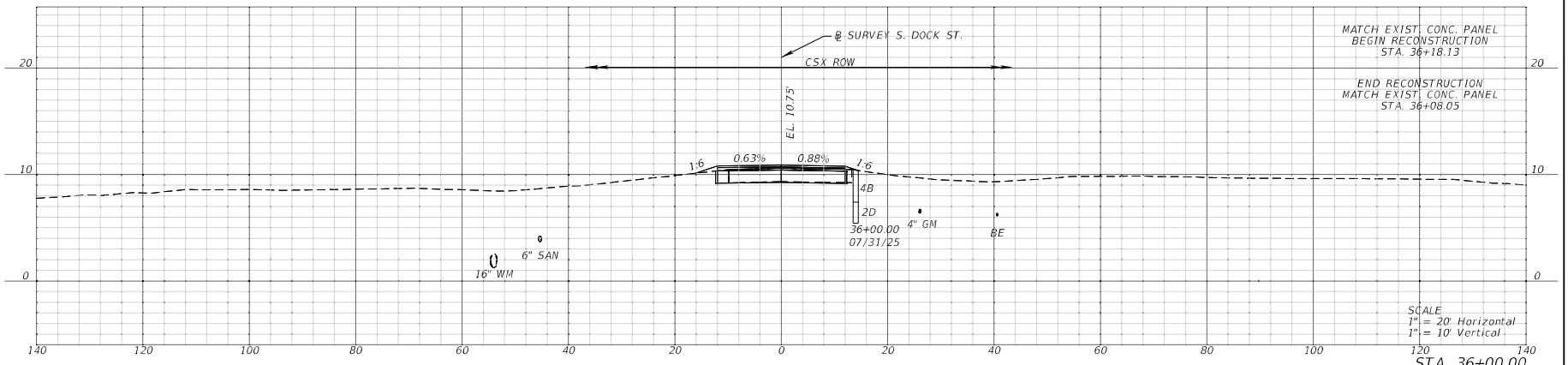

STA. 36+00.00

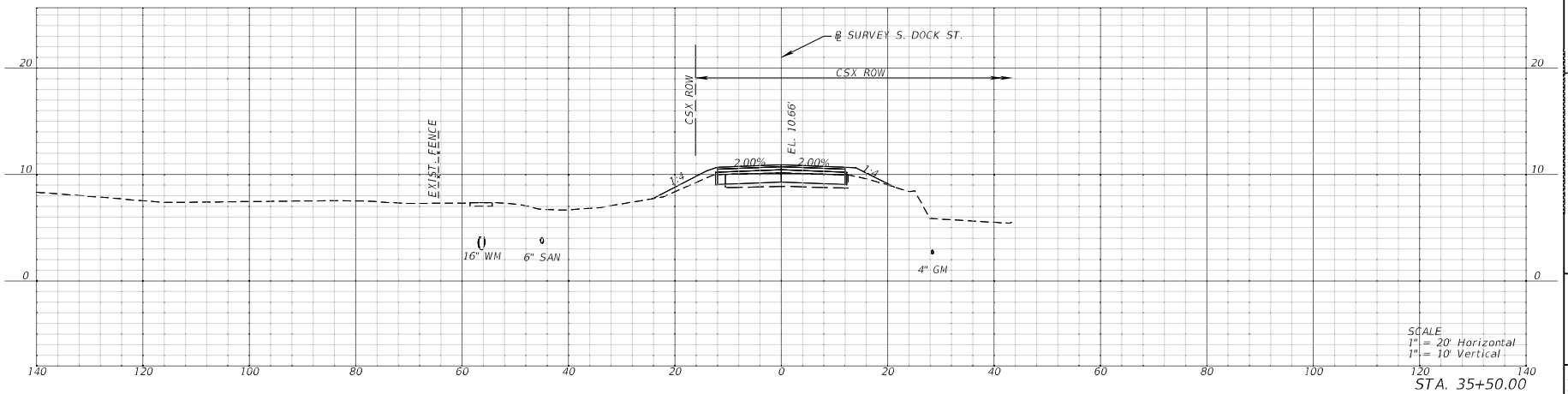

STA. 35+50.00

BID PLANS
14 MAY 2026

SEAPORT Manatee

Revision

Client/Project
SEAPORT MANATEE
SOUTH DOCK STREET PAVING
MANATEE COUNTY, FLORIDA

CROSS SECTIONS

RS&H

RS&H, INC.
1715 N. WESTSHORE BLVD.
SUITE 600
TAMPA, FL 33607
813-289-5550

Permit-Seal

MCPA Project Number:	ITB-20260127-5
Project Number:	10044334006
SCALE:	1" = 20'

JEL	AJB	AJB	10.29.25
Dwn.	Chkd.	Dsgn.	MM.DD.YY

Drawing No. C42

Revision 0 Sheet 42 of 80

THE OFFICIAL RECORD OF THIS SHEET IS THE ELECTRONIC FILE INITIALLY SIGNED AND SEALED UNDER RULE 61G15-23.004, F.A.C.

P:\Manatee_Co_Port_Auth\10044334006_GC_South_Dock_Street\Roadway\RDXSRD02.dgn : RDXSRD02
ByrdA 6/15/2026 11:57:42 AM
ORIGINAL SHEET - 8X11 B

EXHIBIT B

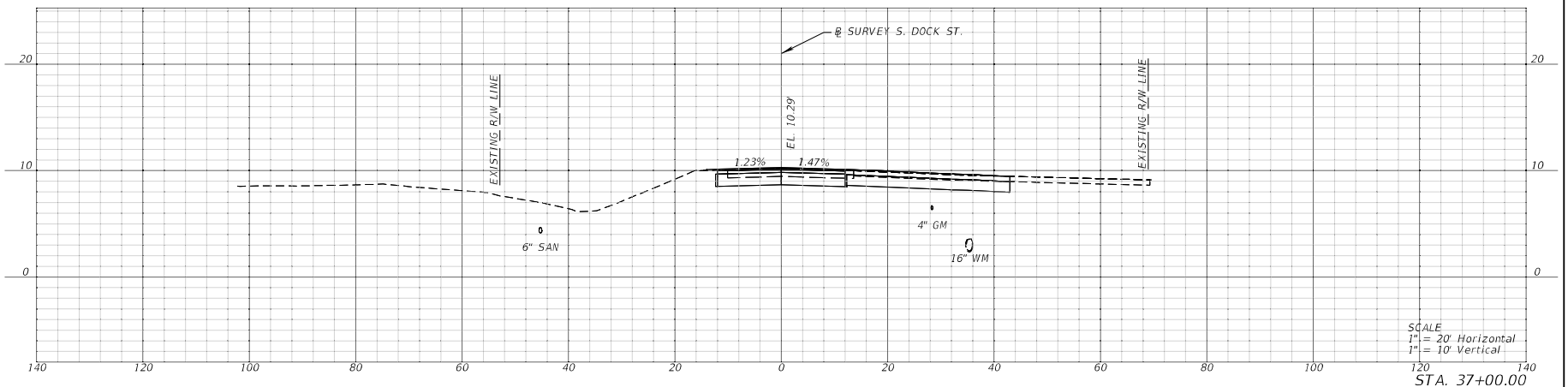

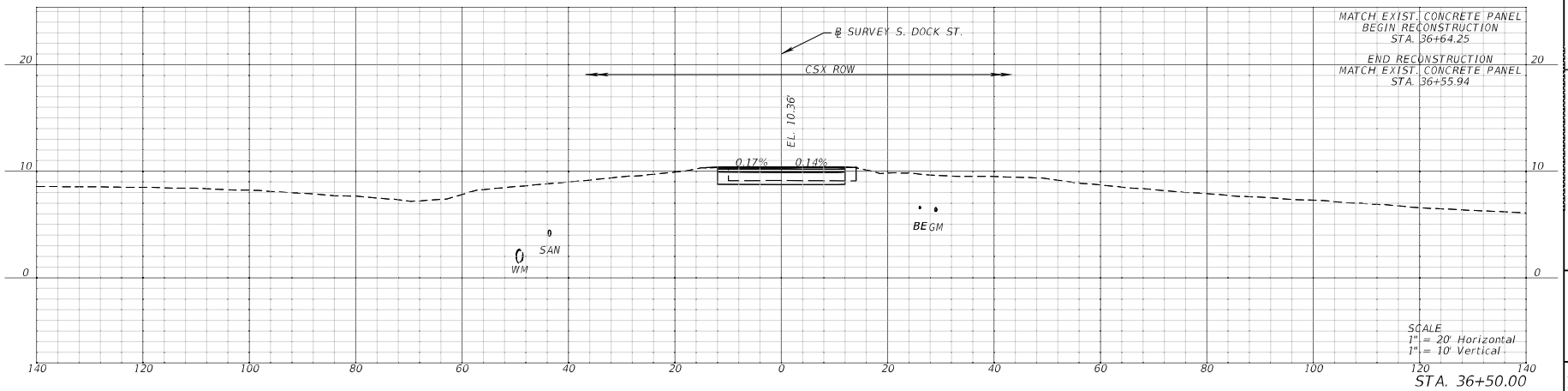

BID PLANS
14 MAY 2026

SEAPORT Manatee

Client/Project
SEAPORT MANATEE
SOUTH DOCK STREET PAVING
MANATEE COUNTY, FLORIDA

CROSS SECTIONS

RS&H

RS&H, INC.
1715 N. WESTSHORE BLVD
SUITE 600
TAMPA, FL 33607
813-289-5550

Permit-Seal

MCPA Project Number:	ITB-20260127-5
Project Number:	10044334006
SCALE:	1" = 20'

JEL	AJB	AJB	10.29.25
Dwn.	Chkd.	Dsgn.	MM.DD.YY

Drawing No. C43

Revision 0 Sheet 43 of 80

THE OFFICIAL RECORD OF THIS SHEET IS THE ELECTRONIC FILE INITIALLY SIGNED AND SEALED UNDER RULE 61G15-23.004, F.A.C.

P:\Manatee_Co_Port_Auth\10044334006_GC_South_Dock_Street\Roadway\RDXSRD02.dgn : RDXSRD02
ByrdA 6/15/2026 11:57:43 AM
ORIGINAL SHEET - ANSI B

EXHIBIT B

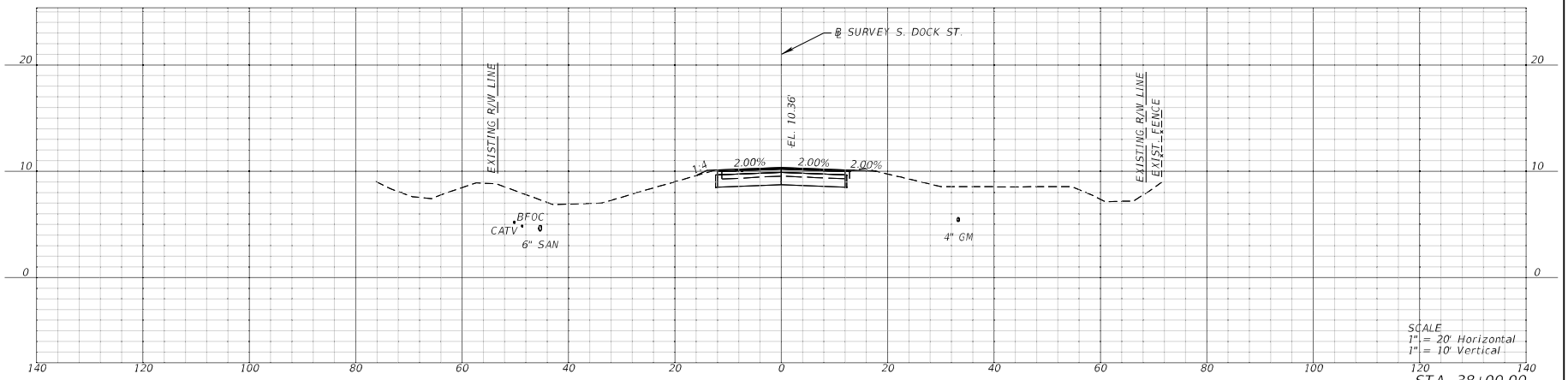

STA. 38+00.00

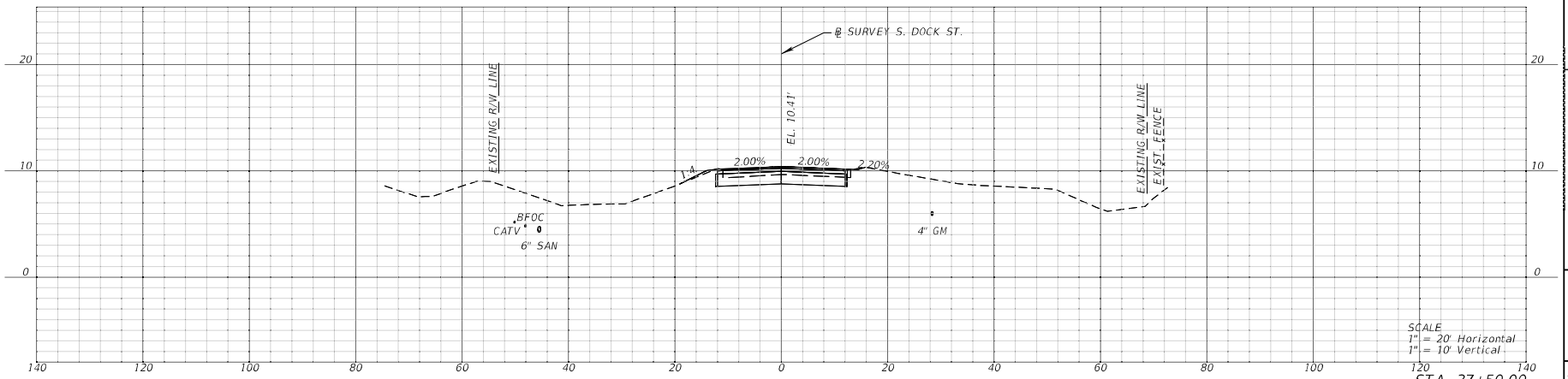

STA. 37+50.00

BID PLANS
14 MAY 2026

SEAPORT Manatee

Client/Project
SEAPORT MANATEE
SOUTH DOCK STREET PAVING
MANATEE COUNTY, FLORIDA

CROSS SECTIONS

Revision

RS&H
RS&H, INC.
TAMPA, FL 33607
813-289-5550

Permit-Seal

MCPA Project Number:	ITB-20260127-5
Project Number:	100443340006
SCALES:	1" = 20'

JJG	AJB	AJB	10.29.25
Dsn.	Chkd.	Dsgn.	MM.DD.YY

Drawing No. C44

Revision	Sheet
0	44 of 80

THE OFFICIAL RECORD OF THIS SHEET IS THE ELECTRONIC FILE ORIGINALLY SIGNED AND SEALED UNDER RULE 61G15-23.004, F.A.C.

P:\Manatee_Co_Port_Auth\100443340006_Ge_South_Dock_Street\Roadway\RDXSR002.dgn - RDXSR002
6/15/2026
11:57:44 AM
ByteA

ORIGINAL SHEET - ANSI B

EXHIBIT B

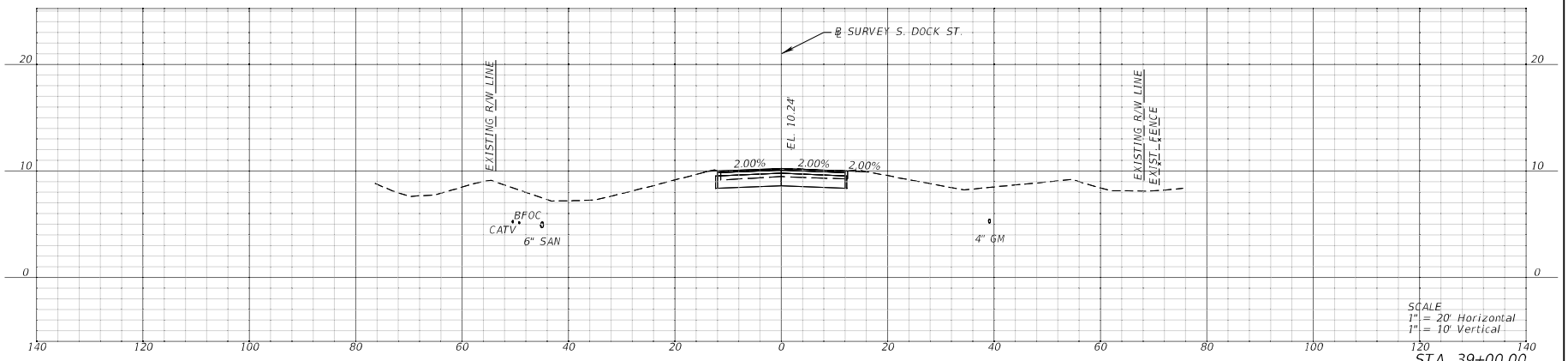

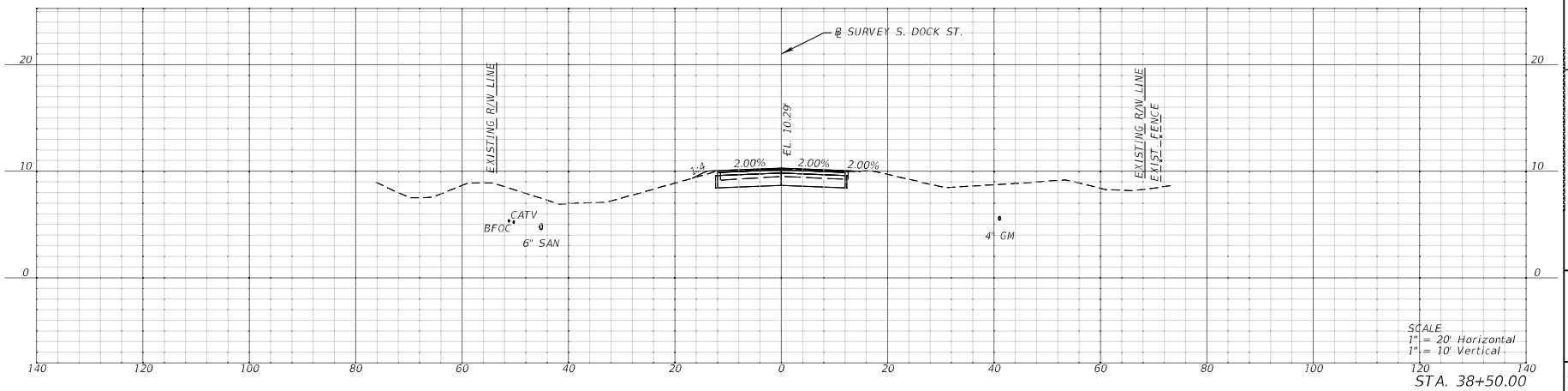

BID PLANS
14 MAY 2026

SEAPORT Manatee

Client/Project
SEAPORT MANATEE
SOUTH DOCK STREET PAVING
MANATEE COUNTY, FLORIDA

CROSS SECTIONS

RS&H

RS&H, INC.
1715 N. WESTSHORE BLVD.
SUITE 600
TAMPA, FL 33607
813-289-5550

Permit-Seal

MCPA Project Number:	ITB-20260127-5
Project Number:	10044334006
SCALE:	1" = 20'

JEL	AJB	AJB	10.29.25
Dwn.	Chkd.	Dsgn.	MM.DD.YY

Drawing No. C45

Revision 0 Sheet 45 of 80

THE OFFICIAL RECORD OF THIS SHEET IS THE ELECTRONIC FILE INITIALLY SIGNED AND SEALED UNDER RULE 61G15-23.004, F.A.C.

P:\Manatee_Co_Port_Auth\10044334006_GC_South_Dock_Street\Roadway\RDXSRD02.dgn : RDXSRD02
ByrdA 6/15/2026 11:57:45 AM
ORIGINAL SHEET • ANSI B

EXHIBIT B

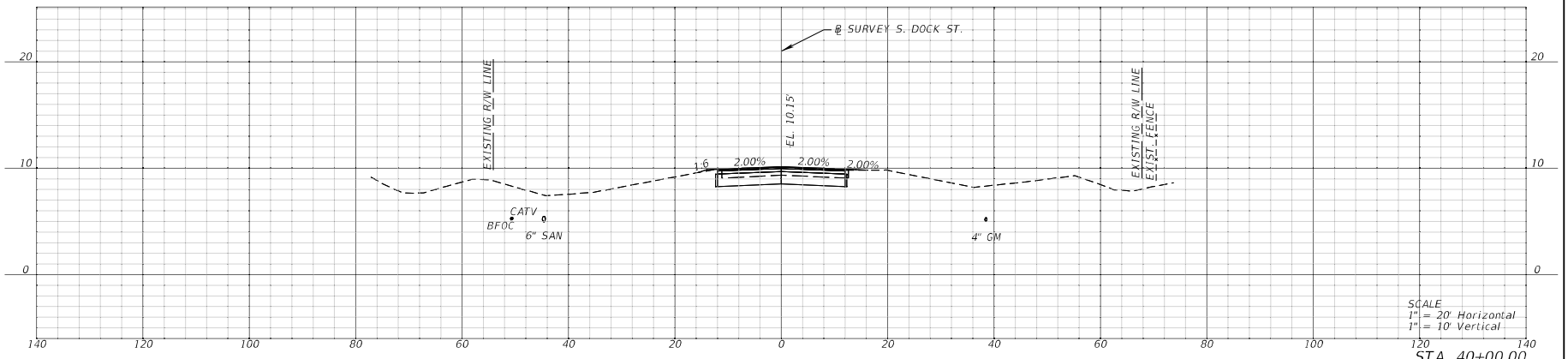

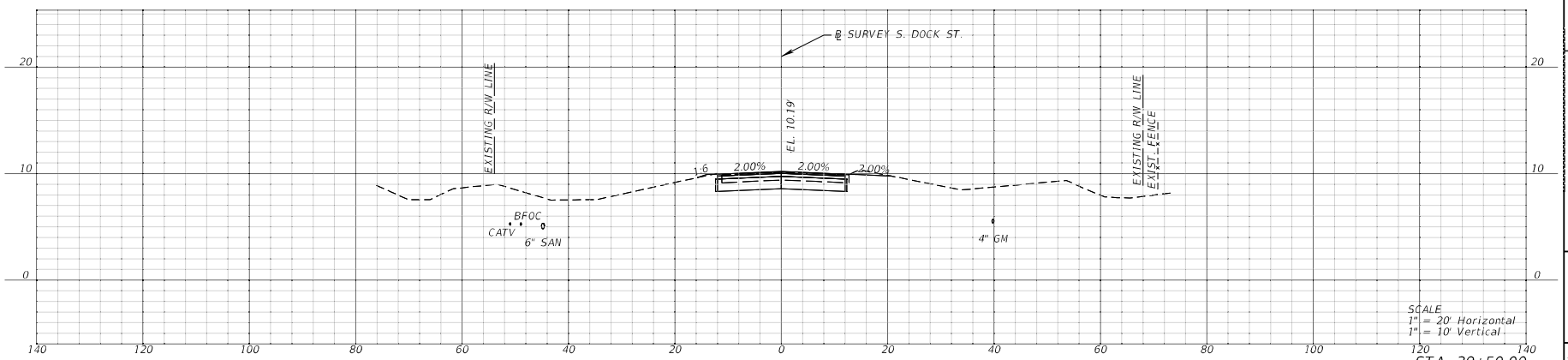

BID PLANS
14 MAY 2026

SEAPORT Manatee

Client/Project
SEAPORT MANATEE
SOUTH DOCK STREET PAVING
MANATEE COUNTY, FLORIDA

CROSS SECTIONS

RS&H

RS&H, INC.
1715 N. WESTSHORE BLVD.
SUITE 600
TAMPA, FL 33607
813-289-5550

Permit-Seal

MCPA Project Number:	ITB-20260127-5
Project Number:	10044334006
SCALE:	1" = 20'

JEL	AJB	AJB	10.29.25
Dwn.	Chkd.	Dsgn.	MM.DD.YY

Drawing No. C46

Revision 0 Sheet 46 of 80

THE OFFICIAL RECORD OF THIS SHEET IS THE ELECTRONIC FILE INITIALLY SIGNED AND SEALED UNDER RULE 61G15-23.004, F.A.C.

P:\Manatee_Co_Port_Auth\10044334006_GC_South_Dock_Street\Roadway\RDXSRD02.dgn : RDXSRD02
ByrdA 6/15/2026 11:57:46 AM
ORIGINAL SHEET - 8X11 B

EXHIBIT B

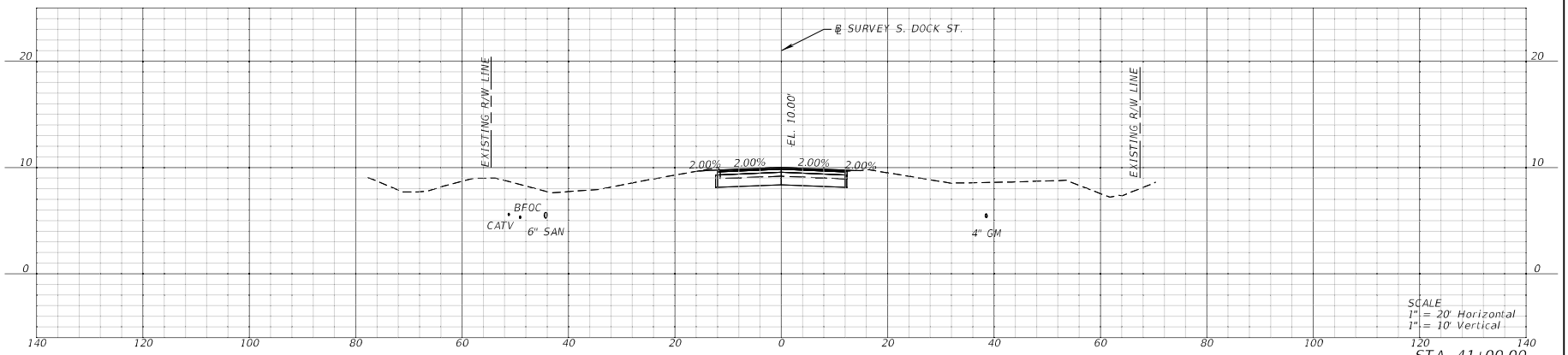

STA. 41+00.00

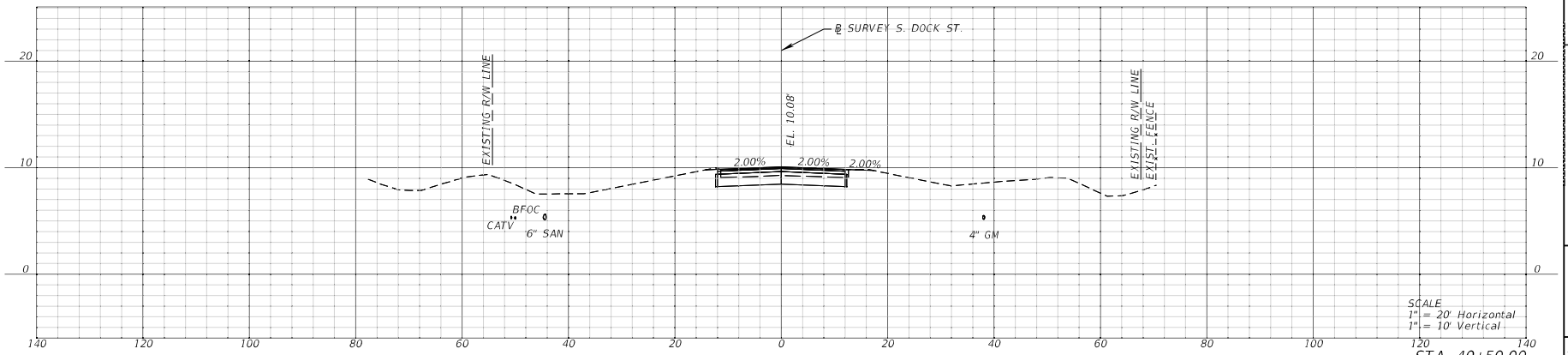

STA. 40+50.00

BID PLANS
14 MAY 2026

SEAPORT Manatee

Client/Project
SEAPORT MANATEE
SOUTH DOCK STREET PAVING
MANATEE COUNTY, FLORIDA

CROSS SECTIONS

Revision

RS&H

RS&H, INC.
1715 N. WESTSHORE BLVD
SUITE 600
TAMPA, FL 33607
813-289-5550

Permit-Seal

MCPA Project Number:	ITB-20260127-5
Project Number:	10044334006
SCALE:	1" = 20'

JEL	AJB	AJB	10.29.25
Dwn.	Chkd.	Dsgn.	MM.DD.YY

Drawing No. C47

Revision 0 Sheet 47 of 80

THE OFFICIAL RECORD OF THIS SHEET IS THE ELECTRONIC FILE INITIALLY SIGNED AND SEALED UNDER RULE 61G15-23.004, F.A.C.

P:\Manatee_Co_Port_Auth\10044334006_GC_South_Dock_Street\Roadway\RDXSRD02.dgn : RDXSRD02
ByrdA 6/15/2026 11:57:47 AM
ORIGINAL SHEET - 8X11 B

EXHIBIT B

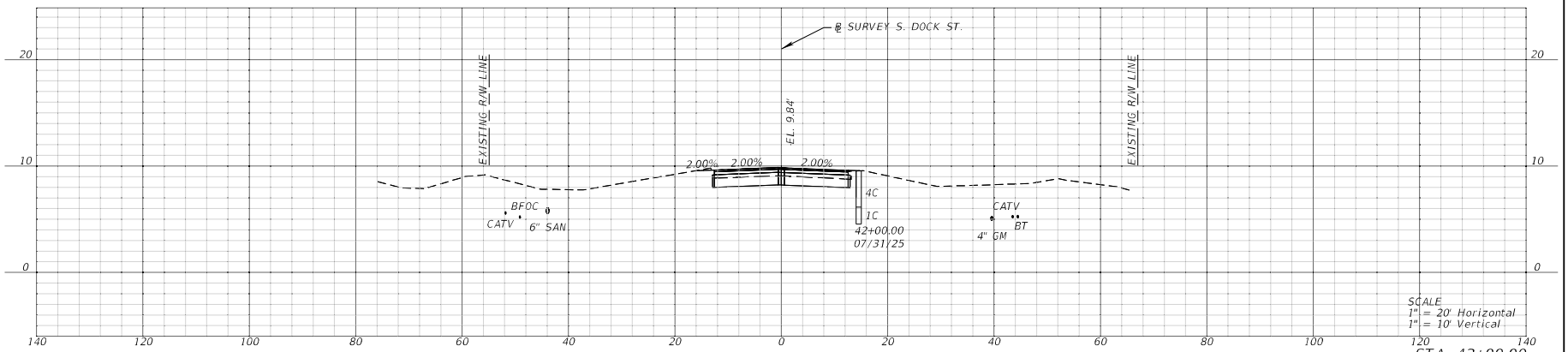

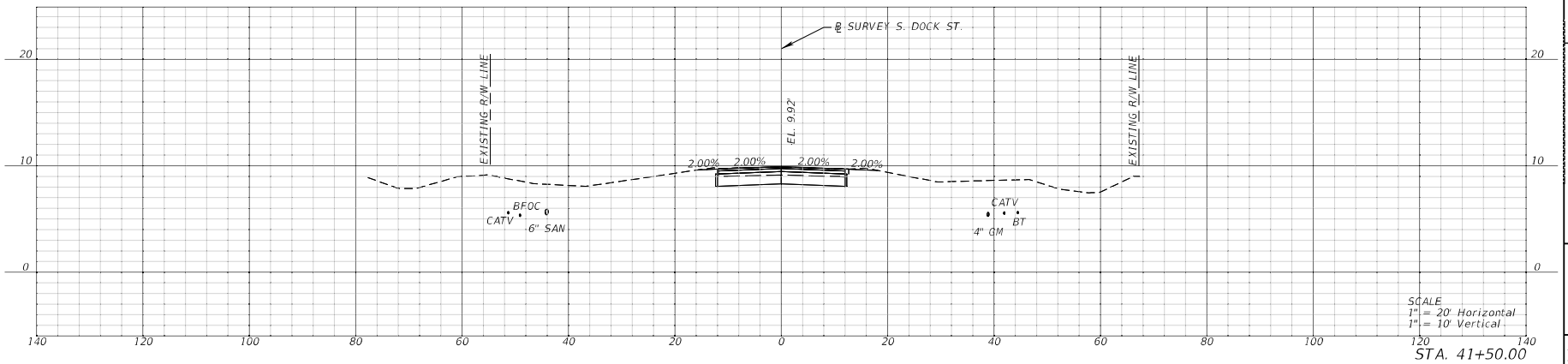

BID PLANS
14 MAY 2026

SEAPORT Manatee
The Agriculture and Seaport Way

MANATEE COUNTY PORT AUTHORITY
[illegible]

Revision | By | Date

Client/Project
SEAPORT MANATEE
SOUTH DOCK STREET PAVING
MANATEE COUNTY, FLORIDA

CROSS SECTIONS

RS&H

RS&H, INC.
[illegible]
SUITE 600
TAMPA, FL 33607
813-289-5550

Permit-Seal

MCPA Project Number:	ITB-20260127-5
Project Number:	10044334006
SCALE:	1" = 20'

JEL	AJB	AJB	10.29.25
Dwn.	Chkd.	Dsgn.	MM.DD.YY

Drawing No. C48

Revision 0 | Sheet 48 of 80

THE OFFICIAL RECORD OF THIS SHEET IS THE ELECTRONIC FILE INITIALLY SIGNED AND SEALED UNDER RULE 61G15-23.004, F.A.C.

P:\Manatee_Co_Port_Auth\10044334006_GC_South_Dock_Street\Roadway\RDXSRD02.dgn : RDXSRD02
ByrdA 6/15/2026 11:57:48 AM
ORIGINAL SHEET - 8X11 B

EXHIBIT B

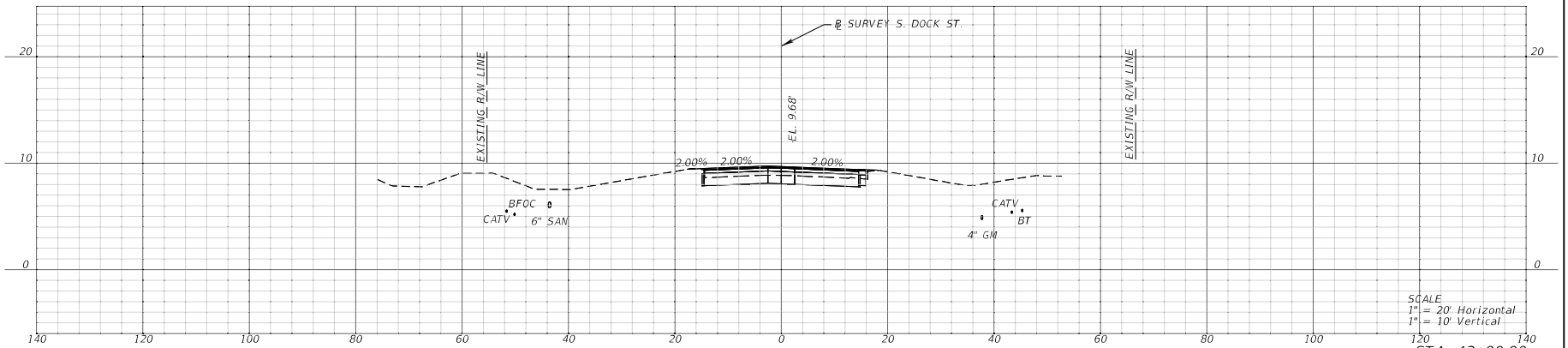

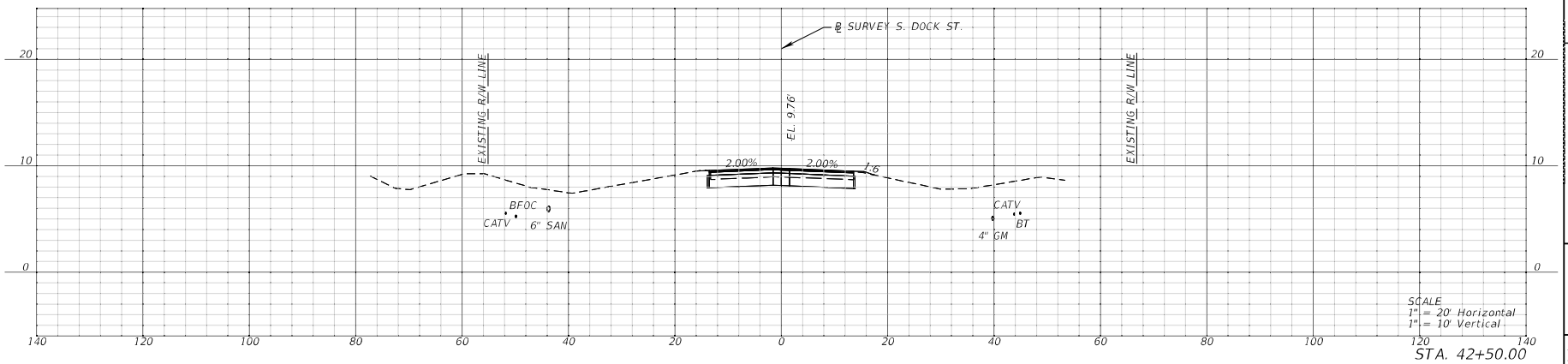

BID PLANS
14 MAY 2026

SEAPORT Manatee

Client/Project
SEAPORT MANATEE
SOUTH DOCK STREET PAVING
MANATEE COUNTY, FLORIDA

CROSS SECTIONS

RS&H

RS&H, INC.
1715 N. WESTSHORE BLVD.
SUITE 600
TAMPA, FL 33607
813-289-5550

Permit-Seal

MCPA Project Number:	ITB-20260127-5
Project Number:	10044334006
SCALE:	1" = 20'

JEL	AJB	AJB	10.29.25
Dwn.	Chkd.	Dsgn.	MM.DD.YY

Drawing No. C49

Revision 0 Sheet 49 of 80

THE OFFICIAL RECORD OF THIS SHEET IS THE ELECTRONIC FILE INITIALLY SIGNED AND SEALED UNDER RULE 61G15-23.004, F.A.C.

P:\Manatee_Co_Port_Auth\10044334006_GC_South_Dock_Street\Roadway\RDXSRD02.dgn : RDXSRD02
ByrdA 6/15/2026 11:57:49 AM
ORIGINAL SHEET - ANSI B

EXHIBIT B

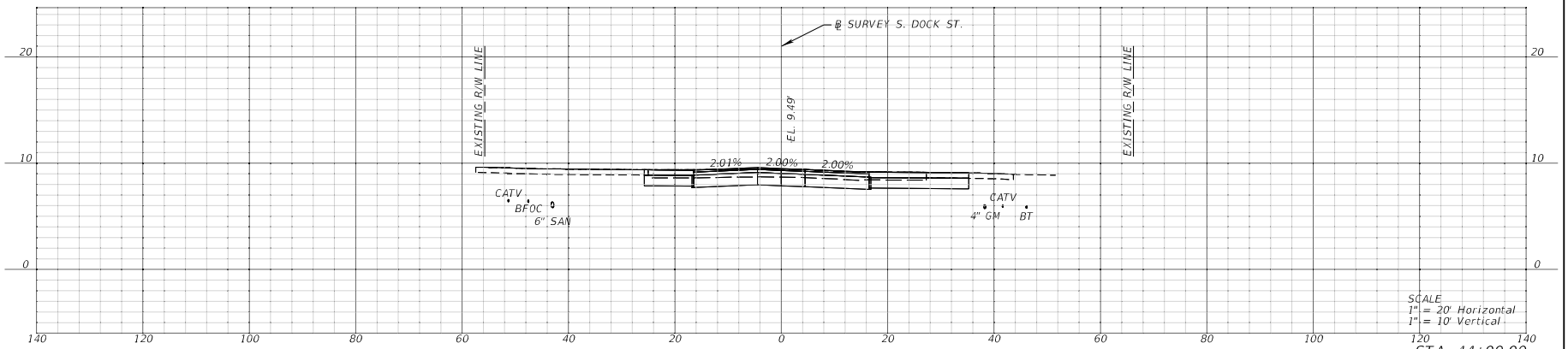

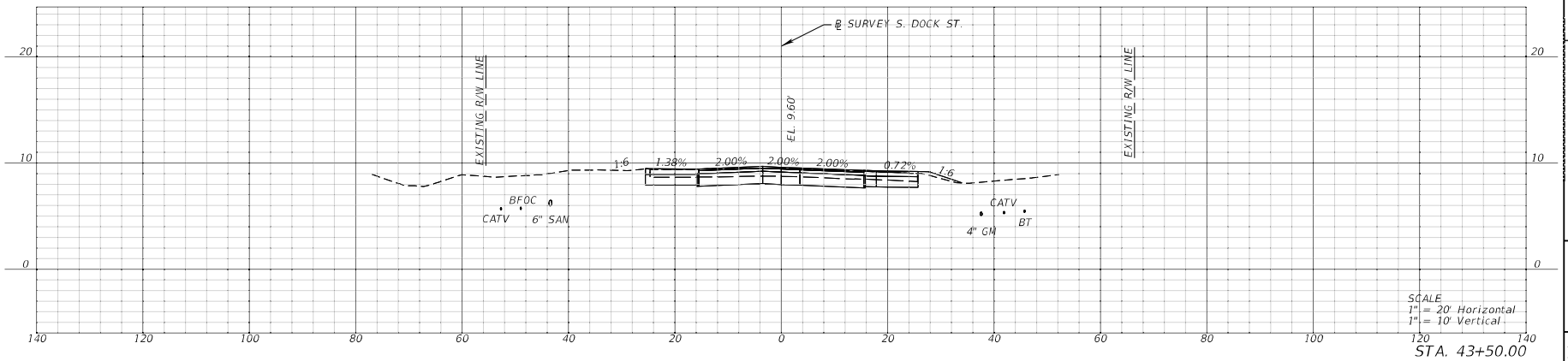

BID PLANS
14 MAY 2026

SEAPORT Manatee

Client/Project
SEAPORT MANATEE
SOUTH DOCK STREET PAVING
MANATEE COUNTY, FLORIDA

CROSS SECTIONS

RS&H

RS&H, INC.
1715 N. WESTSHORE BLVD
SUITE 600
TAMPA, FL 33607
813-289-5550

Permit-Seal

MCPA Project Number:	ITB-20260127-5
Project Number:	10044334006
SCALE:	1" = 20'

JEL	AJB	AJB	10.29.25
Dwn.	Chkd.	Dsgn.	MM.DD.YY

Drawing No. C50

Revision 0 Sheet 50 of 80

THE OFFICIAL RECORD OF THIS SHEET IS THE ELECTRONIC FILE INITIALLY SIGNED AND SEALED UNDER RULE 61G15-23.004, F.A.C.

P:\Manatee_Co_Port_Auth\10044334006_GC_South_Dock_Street\Roadway\RDXSRD02.dgn : RDXSRD02
ByrdA 6/15/2026 11:57:50 AM
ORIGINAL SHEET - ANSI B

EXHIBIT B

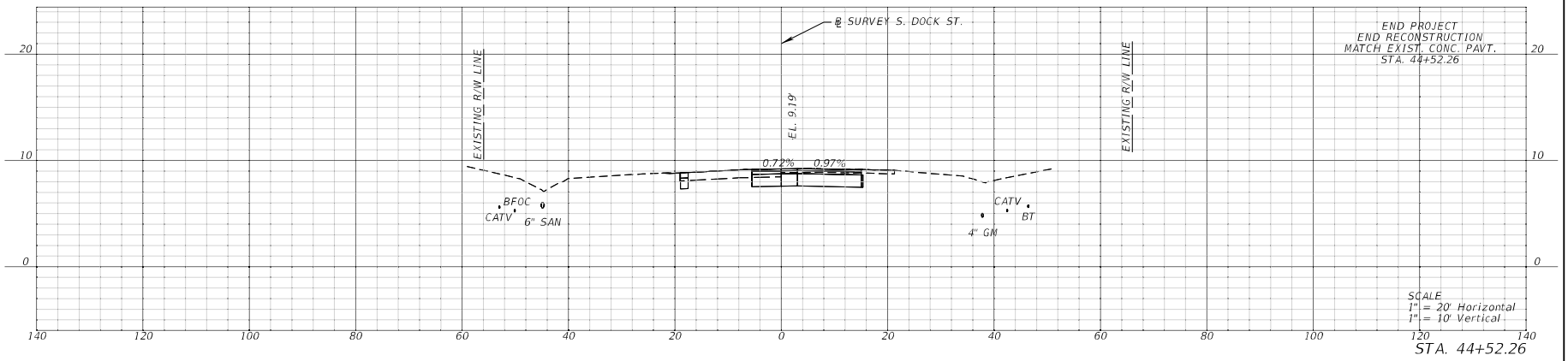

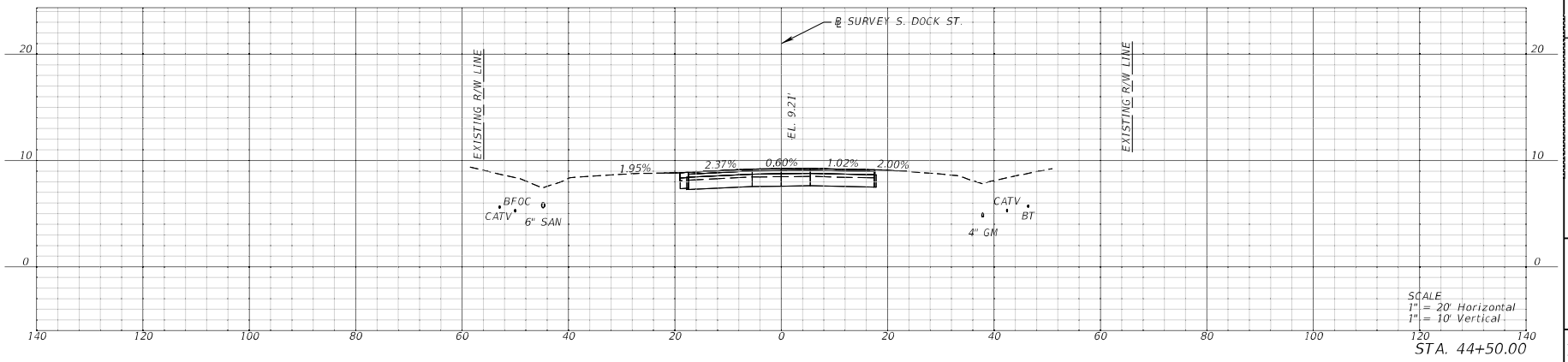

BID PLANS
14 MAY 2026

SEAPORT Manatee

Revision

Client/Project
SEAPORT MANATEE
SOUTH DOCK STREET PAVING
MANATEE COUNTY, FLORIDA

CROSS SECTIONS

RS&H

RS&H, INC.
1715 N. WESTSHORE BLVD
SUITE 600
TAMPA, FL 33607
813-289-5550

Permit-Seal

MCPA Project Number:	ITB-20260127-5
Project Number:	10044334006
SCALE:	1" = 20'

JEL	AJB	AJB	10.29.25
Dwn.	Chkd.	Dsgn.	MM.DD.YY

Drawing No. C51

Revision 0 Sheet 51 of 80

THE OFFICIAL RECORD OF THIS SHEET IS THE ELECTRONIC FILE INITIALLY SIGNED AND SEALED UNDER RULE 61G15-23.004, F.A.C.

P:\Manatee_Co_Port_Auth\10044334006_GC_South_Dock_Street\Roadway\RDXSRD02.dgn : RDXSRD02
ByrdA 6/15/2026 11:57:51 AM
ORIGINAL SHEET • ANSI B

EXHIBIT B

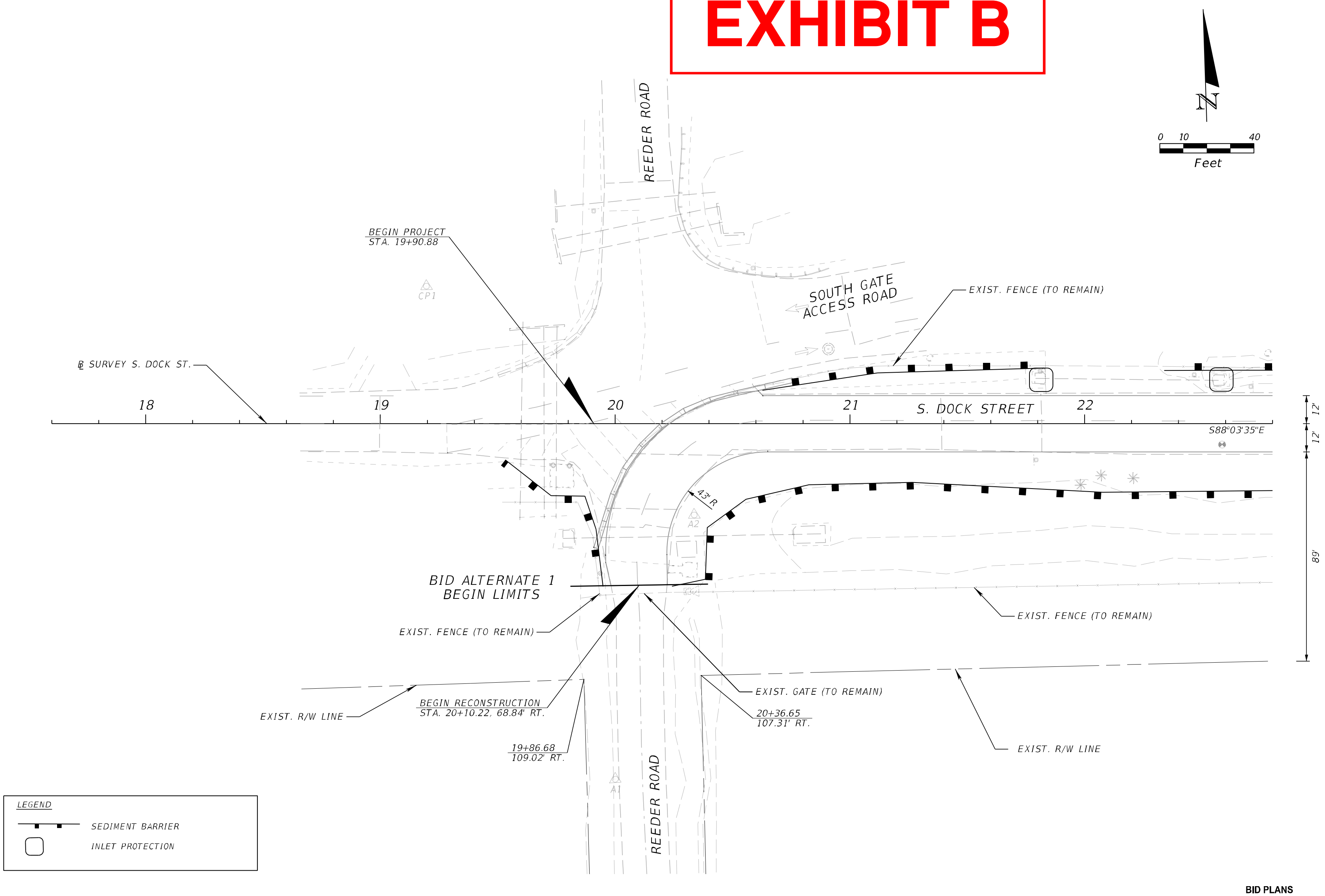

BID PLANS
14 MAY 2026

SEAPORT Manatee

Client/Project
SEAPORT MANATEE
SOUTH DOCK STREET PAVING
MANATEE COUNTY, FLORIDA

EROSION CONTROL PLAN

RS&H
RS&H, INC.
SUITE 600
TAMPA, FL 33607
813-289-5550

Permit-Seal

MCPA Project Number:	ITB-20260127-5
Project Number:	100443334006
SCALE:	1" = 40'

SNM	AJB	AJB	10.15.25
Dwn.	Chkd.	Dsgn.	MM.DD.YY

Drawing No. C52
Revision 0
Sheet 52 of 80

Revision

THE OFFICIAL RECORD OF THIS SHEET IS THE ELECTRONIC FILE DIGITALLY SIGNED AND SEALED UNDER RULE 61G15-23.004, F.A.C.

P:\Manatee_Co_Port_Auth\100443334006_GC_South_Dock_Street\Roadway\PLANRD01_EC.dgn : PLANRDEC00
6/15/2026 11:58:00 AM
ByrdA

EXHIBIT B

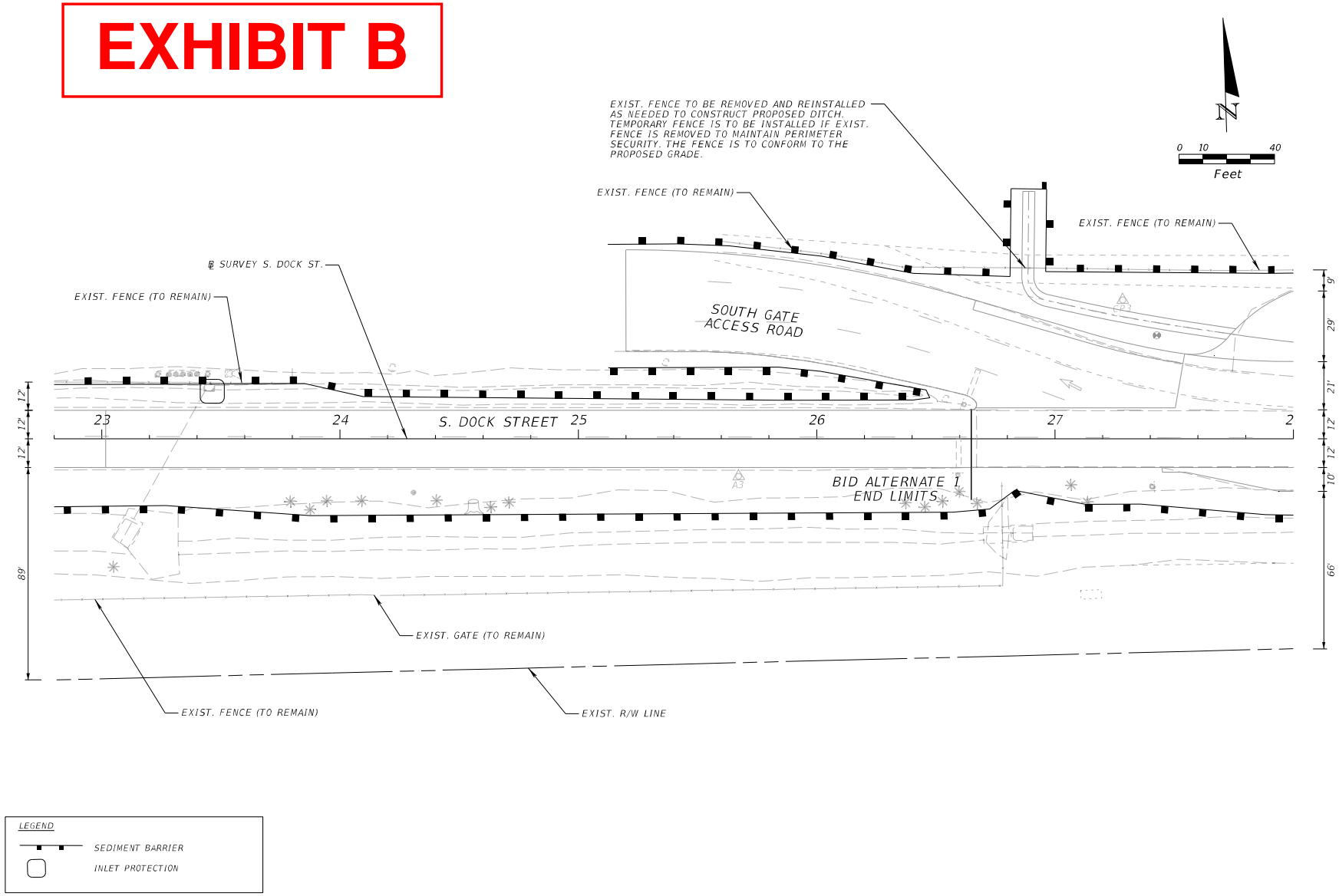

BID PLANS
14 MAY 2026

SEAPORT Manatee

Client/Project
SEAPORT MANATEE
SOUTH DOCK STREET PAVING
MANATEE COUNTY, FLORIDA

EROSION CONTROL PLAN

RS&H

RS&H, INC.
1715 N. WESTSHORE BLVD
SUITE 600
TAMPA, FL 33607
813-289-5550

Permit-Seal

MCPA Project Number:	ITB-20260127-5
Project Number:	10044334006
SCALE:	1" = 40'

SNM	AJB	AJB	10.15.25
Dwn.	Chkd.	Dsgn.	MM.DD.YY

Drawing No. C53

Revision	Sheet
0	53 of 80

THE OFFICIAL RECORD OF THIS SHEET IS THE ELECTRONIC FILE INITIALLY SIGNED AND SEALED UNDER RULE 61G15-23.004, F.A.C.

P:\Manatee_Co_Port_Auth\10044334006_GC_South_Dock_Street\Roadway\PLANRD02_EC.dgn : PLANRD-IEC00
ByrdA 6/15/2026 11:58:03 AM
ORIGINAL SHEET - ANSI B

EXHIBIT B

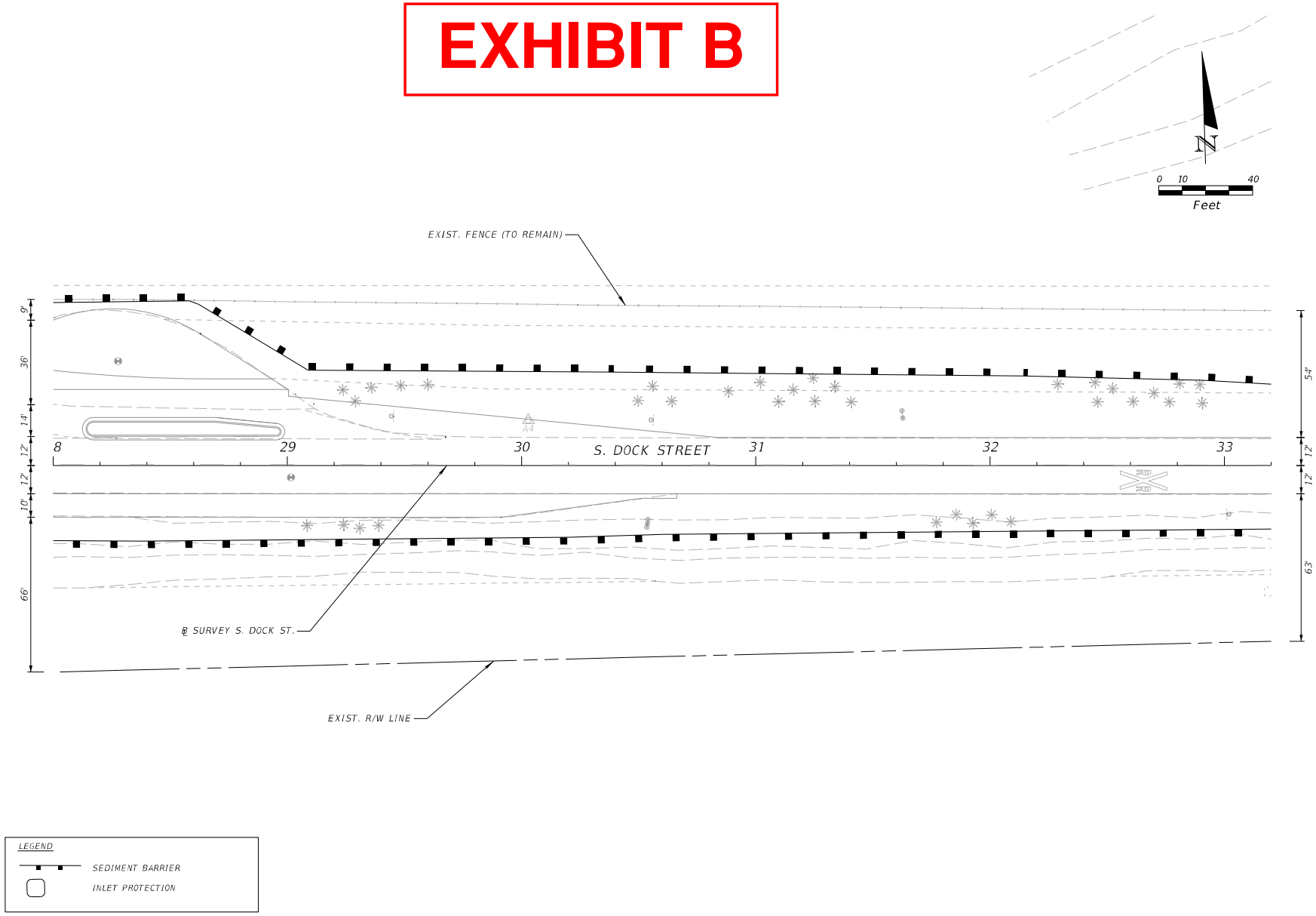

BID PLANS
14 MAY 2026

SEAPORT Manatee

Client/Project
SEAPORT MANATEE
SOUTH DOCK STREET PAVING
MANATEE COUNTY, FLORIDA

EROSION CONTROL PLAN

RS&H

RS&H, INC.
1715 N. WESTSHORE BLVD
SUITE 600
TAMPA, FL 33607
813-289-5550

Permit-Seal

MCPA Project Number:	ITB-20260127-5
Project Number:	10044334006
SCALE:	1" = 40'

SNM	AJB	AJB	10.15.25
Dwn.	Chkd.	Dsgn.	MM.DD.YY

Drawing No. C54

Revision 0 Sheet 54 of 80

THE OFFICIAL RECORD OF THIS SHEET IS THE ELECTRONIC FILE INITIALLY SIGNED AND SEALED UNDER RULE 61G15-23.004, F.A.C.

P:\Manatee_Co_Port_Auth\10044334006_GC_South_Dock_Street\Roadway\PLANRD03_EC.dgn : PLANRD-2EC00
ByrdA 6/15/2026 11:58:05 AM
ORIGINAL SHEET - 8X11B

EXHIBIT B

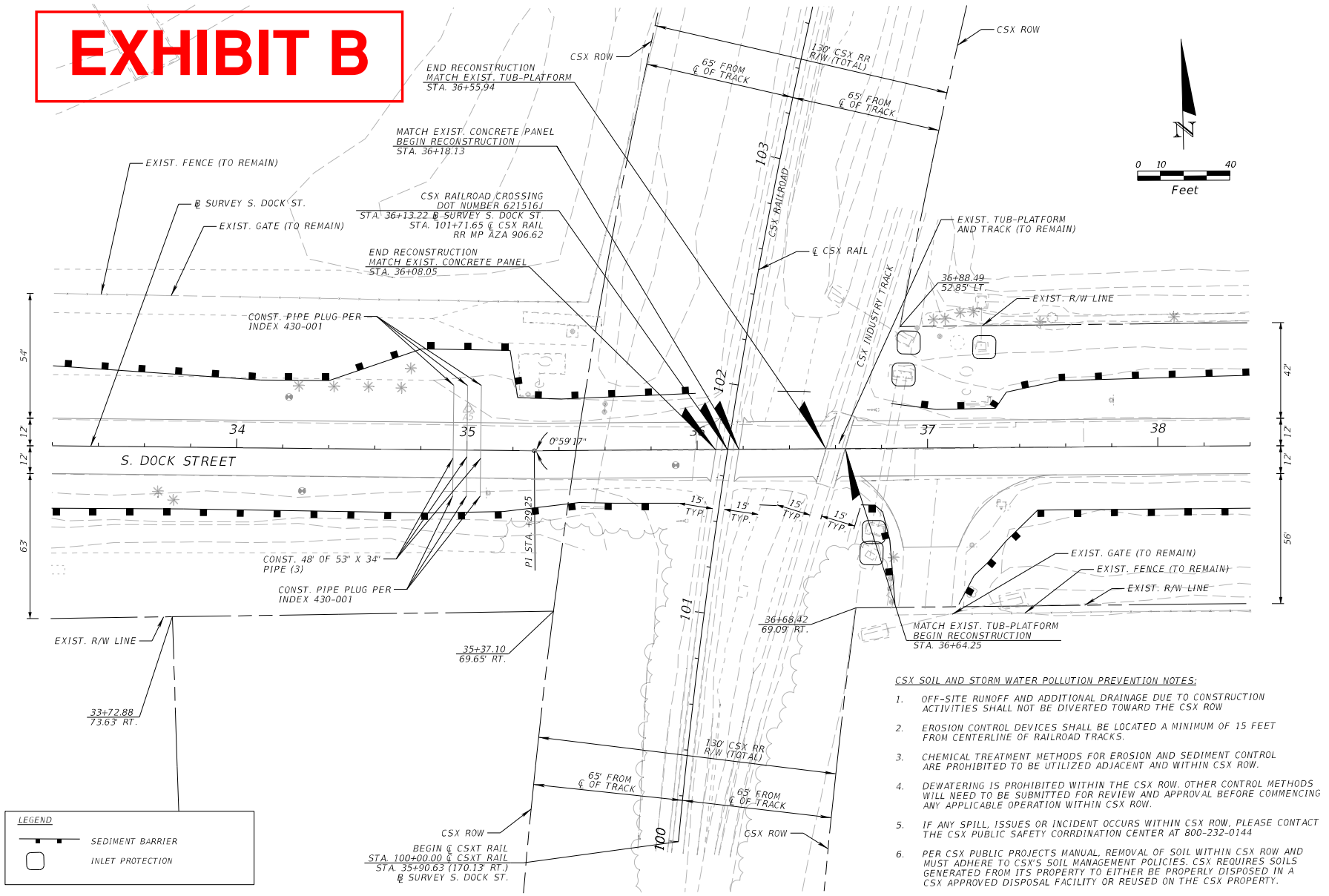

CSX SOIL AND STORM WATER POLLUTION PREVENTION NOTES:

1. OFF-SITE RUNOFF AND ADDITIONAL DRAINAGE DUE TO CONSTRUCTION ACTIVITIES SHALL NOT BE DIVERTED TOWARD THE CSX ROW
2. EROSION CONTROL DEVICES SHALL BE LOCATED A MINIMUM OF 15 FEET FROM CENTERLINE OF RAILROAD TRACKS.
3. CHEMICAL TREATMENT METHODS FOR EROSION AND SEDIMENT CONTROL ARE PROHIBITED TO BE UTILIZED ADJACENT AND WITHIN CSX ROW.
4. DEWATERING IS PROHIBITED WITHIN THE CSX ROW. OTHER CONTROL METHODS WILL NEED TO BE SUBMITTED FOR REVIEW AND APPROVAL BEFORE COMMENCING ANY APPLICABLE OPERATION WITHIN CSX ROW.
5. IF ANY SPILL, ISSUES OR INCIDENT OCCURS WITHIN CSX ROW, PLEASE CONTACT THE CSX PUBLIC SAFETY CORRDINATION CENTER AT 800-232-0144
6. PER CSX PUBLIC PROJECTS MANUAL, REMOVAL OF SOIL WITHIN CSX ROW AND MUST ADHERE TO CSX'S SOIL MANAGEMENT POLICIES. CSX REQUIRES SOILS GENERATED FROM ITS PROPERTY TO EITHER BE PROPERLY DISPOSED IN A CSX APPROVED DISPOSAL FACILITY OR REUSED ON THE CSX PROPERTY.

BID PLANS
14 MAY 2026

SEAPORT Manatee

Revision

Client/Project
SEAPORT MANATEE
SOUTH DOCK STREET PAVING
MANATEE COUNTY, FLORIDA

EROSION CONTROL PLAN

RS&H

RS&H, INC.
1715 N. WESTSHORE BLVD
SUITE 600
TAMPA, FL 33607
813-289-5550

Permit-Seal

MCPA Project Number:	ITB-20260127-5
Project Number:	10044334006
SCALE:	1" = 40'

SNM	AJB	AJB	10.15.25
Dwn.	Chkd.	Dsgn.	MM.DD.YY

Drawing No. C55

Revision	Sheet
0	55 of 80

THE OFFICIAL RECORD OF THIS SHEET IS THE ELECTRONIC FILE INITIALLY SIGNED AND SEALED UNDER RULE 61G15-23.004, F.A.C.

P:\Manatee_Co_Port_Auth\10044334006_GC_South_Dock_Street\Roadway\PLANRD04_EC.dgn : PLANRD-IEC00
ByrdA 6/15/2026 11:58:08 AM
ORIGINAL SHEET • ANSI B

EXHIBIT B

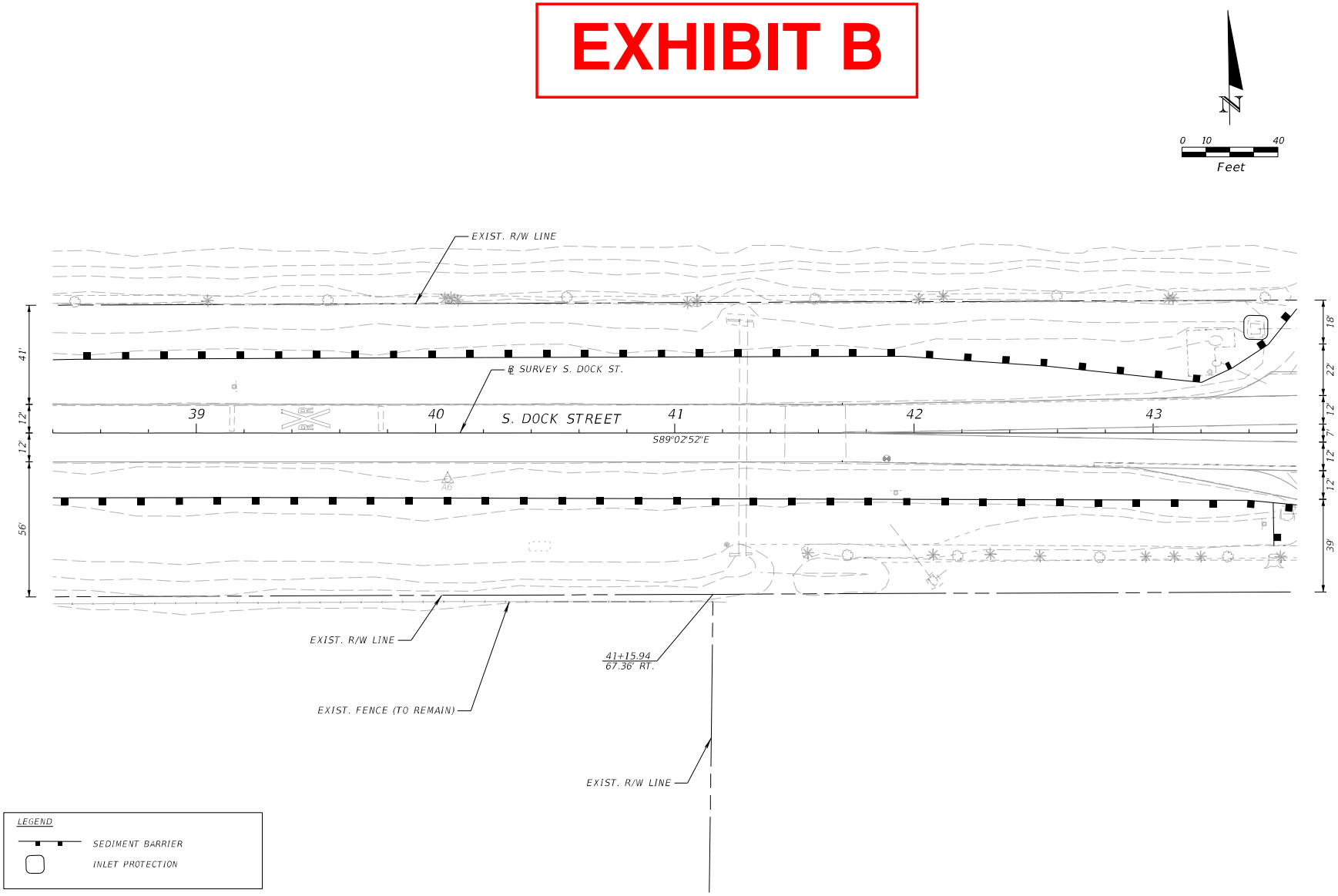

BID PLANS
14 MAY 2026

SEAPORT Manatee

Client/Project
SEAPORT MANATEE
SOUTH DOCK STREET PAVING
MANATEE COUNTY, FLORIDA

EROSION CONTROL PLAN

Revision

RS&H

RS&H, INC.
1715 N. WESTSHORE BLVD
SUITE 600
TAMPA, FL 33607
813-289-5550

Permit-Seal

MCPA Project Number:	ITB-20260127-5
Project Number:	10044334006
SCALE:	1" = 40'

SNM	AJB	AJB	10.15.25
Dwn.	Chkd.	Dsgn.	MM.DD.YY

Drawing No. C56

Revision 0 Sheet 56 of 80

THE OFFICIAL RECORD OF THIS SHEET IS THE ELECTRONIC FILE INITIALLY SIGNED AND SEALED UNDER RULE 61G15-23.004, F.A.C.

P:\Manatee_Co_Port_Auth\10044334006_GC_South_Dock_Street\Roadway\PLANRD05_EC.dgn : PLANRD-4EC00
ByrdA 6/15/2026 11:58:11 AM

EXHIBIT B

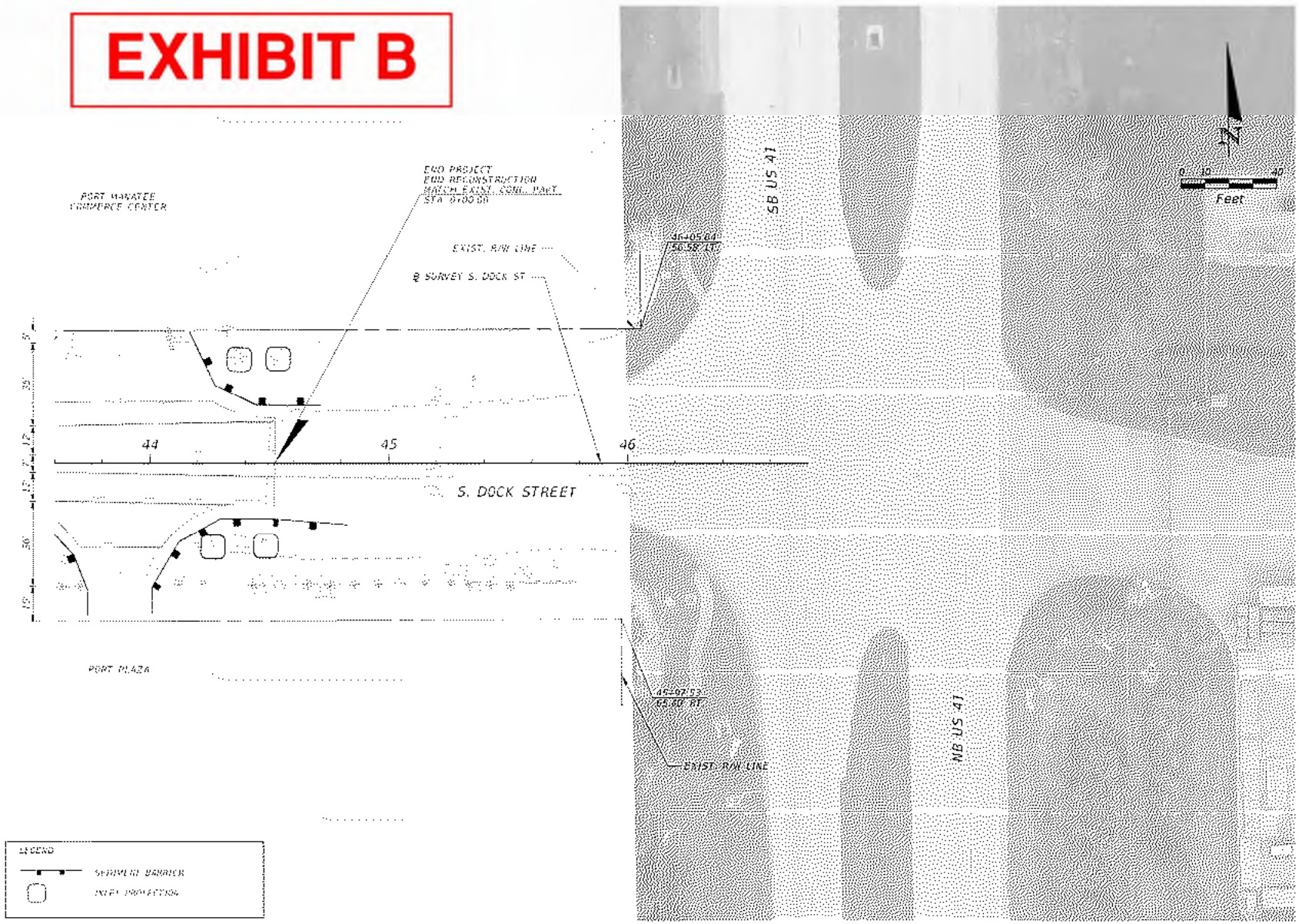

BID PLANS
14 MAY 2026

SEAPORT Manatee
The right hub on Tampa Bay

Client Project
SEAPORT MANATEE
SOUTH DOCK STREET PAVING
MANATEE COUNTY, FLORIDA

EROSION CONTROL PLAN

RS&H
RS&H, INC.
1715 N. WESTSHORE BLVD
SUITE 600
TAMPA, FL 33607

Permit-Seal

Drawing No. C57
Revision Sheet

THE OFFICIAL RECORD OF THIS SHEET IS THE ELECTRONIC FILE DIGITALLY STORED AND SEALED UNDER RULE 61G15-23.004, F.A.C.

EXHIBIT B

TRAFFIC CONTROL PLAN GENERAL NOTES:

1. THESE TRAFFIC CONTROL PLAN GENERAL NOTES APPLY TO ALL TTCP WORK IN THIS SET OF DRAWINGS.
2. EXISTING SIGNS AND PAVEMENT MARKINGS THAT ARE NO LONGER APPLICABLE OR ARE INCONSISTENT WITH THE INTENDED TRAVEL PATTERNS MUST BE REMOVED.
3. ARROWS ON THE TTCP DENOTE THE DIRECTION OF TRAFFIC ONLY AND DO NOT REFLECT PAVEMENT MARKINGS UNLESS SPECIFICALLY NOTED.
4. PLACE CHANNELIZING DEVICES, TEMPORARY STRIPING, TEMPORARY SIGNS, AND PORTABLE CHANGEABLE MESSAGE SIGNS AT THE LOCATIONS SHOWN IN THE PLANS WHILE MAINTAINING TRAFFIC AS DEFINED IN FDOT STANDARD PLANS INDEX 102-600.
5. COORDINATE WITH FDOT DISTRICT 1 TRAFFIC OPERATIONS AND MANATEE OPERATIONS CENTER FOR APPROVAL OF ADVANCED SIGN PLACEMENT WITHIN FDOT RIGHT-OF-WAY ALONG US 41.
6. COORDINATE WITH SEAPORT MANATEE ON PROVIDING ACCESS TO THE FLORIDA POWER & LIGHT OIL FARM TO THE SOUTH ALONG REEDER ROAD. THIS WILL REQUIRE THE RELOCATION OF THE TEMPORARY BARRIER AND SECURITY FENCE AT THE INTERSECTION OF S. DOCK ST. AND REEDER RD.
6. THE WORK ZONE SPEED IS 15 MPH FOR ALL PHASES.

WORK ADJACENT OR WITHIN CSX RIGHT-OF-WAY

1. ROADWAY FLAGGERS MUST BE PRESENT ON EACH SIDE OF THE RAILROAD CROSSING, ANYTIME TRAFFIC IS DIRECTED INTO OPPOSING TRAFFIC LANES AT THE RAILROAD CROSSING.
2. CHANNELIZATION/MOT DEVICES SHALL NOT BE PLACED WITHIN 25 FT FROM CENTER LINE OF RAILROAD TRACKS. IF CSX FORCES ARE TO PERFORM WORK WITHIN MOT, FINAL PLACEMENT MOT DEVICES IN RELATION TO CSX TRACK CENTERLINE SHALL BE DETERMINED DURING PRE CONSTRUCTION MEETING, AT THE DISCRETION OF THE CSX TRACK SUPERVISOR.

PHASE I - TEMPORARY TRAFFIC CONTROL PHASING NOTES:

1. PUT TEMPORARY DETOUR IN PLACE.
2. SHIFT S. DOCK ST. TRAFFIC TO PINEY POINT RD., N. DOCK ST., AND REEDER RD. UTILIZING THE TEMPORARY DETOUR. MAINTAIN LOCAL ROAD TRAFFIC FOR PROPERTIES AND BUSINESSES LOCATED ON S. DOCK ST., EAST OF THE RAIL CROSSINGS, AS NOTED IN THE PLANS.
3. CLOSE THE PORT MANATEE SOUTH GATE ENTRANCE/EXIT AND CLOSE S. DOCK ST. FROM REEDER RD. TO JUST EAST OF THE RAILROAD CROSSINGS.
4. BEGIN RECONSTRUCTION AND WIDENING OF S. DOCK ST. BETWEEN REEDER RD. AND JUST EAST OF THE RAILROAD CROSSINGS. INSTALL THE (3) 53"X34" PIPE CULVERTS AS SHOWN IN THE PLANS.
5. CLOSE THE NORTH ENTRANCE TO THE PORT MANATEE COMMERCE CENTER ALONG S. DOCK ST. AND RECONSTRUCT THE DRIVEWAY LOCATED AT 43+87.82 (LT.) UTILIZING STANDARD INDEX 102-600 AND 102-602. PHASE CONSTRUCT THE DRIVEWAYS LOCATED AT STA. 37+04.31 (RT.) AND STA. 43+87.37 (RT.) UTILIZING STANDARD INDEX 102-600 AND 102-603. THESE DRIVEWAYS WILL BE USED FOR SUBSEQUENT PHASE ACCESS MANAGEMENT.

PHASE IIA - TEMPORARY TRAFFIC CONTROL PHASING NOTES:

1. CONTINUE THE S. DOCK ST. RECONSTRUCTION, WIDENING, AND PIPE INSTALLATION ACTIVITIES FROM PHASE I.
2. CONFIGURE LOCAL ROAD TRAFFIC AS PER STANDARD INDEX 102-603 FOR THE FOLLOWING WORK EAST OF THE RAILROAD CROSSING AS DEFINED IN THE PHASE IIA PLANS USING THE WESTBOUND LANE AS A ONE LANE, TWO-WAY ROADWAY:
   a. PLACE TEMPORARY STRIPING
   b. PLACE TEMPORARY SIGNING
3. RECONSTRUCT THE S. DOCK ST. EASTBOUND LANE, FROM EAST OF THE RAILROAD CROSSINGS TO US 41, AS DESCRIBED IN THE PLANS.

PHASE IIB - TEMPORARY TRAFFIC CONTROL PHASING NOTES:

1. CONTINUE THE S. DOCK ST. RECONSTRUCTION, WIDENING, AND PIPE INSTALLATION ACTIVITIES FROM PHASE I.
2. CONFIGURE LOCAL ROAD TRAFFIC AS PER STANDARD INDEX 102-603 FOR THE FOLLOWING WORK EAST OF THE RAILROAD CROSSING AS DEFINED IN PHASE IIB PLANS USING THE NEWLY RECONSTRUCTED EASTBOUND LANE AS A ONE LANE, TWO-WAY ROADWAY:
   a. PLACE TEMPORARY STRIPING
   b. PLACE TEMPORARY SIGNING
3. RECONSTRUCT THE S. DOCK ST. WESTBOUND LANE, FROM EAST OF THE RAILROAD CROSSINGS TO US 41, AS DESCRIBED IN THE PLANS

PHASE III - TEMPORARY TRAFFIC CONTROL PHASING NOTES:

1. PLACE FINAL PAVEMENT MARKINGS.
2. REMOVE ALL TRAFFIC CONTROL DEVICES.
3. REOPEN THE SEAPORT MANATEE SOUTH GATE ENTRANCE/EXIT AND ALIGN TRAFFIC TO FINAL CONFIGURATION.
4. REMOVE DETOUR.

BID PLANS
14 MAY 2026

SEAPORT Manatee
The Power Behind Florida's Future

MANATEE COUNTY PORT AUTHORITY
300 TAMPA BAY WAY, SUITE 1
PALMETTO, FL 34221

Revision	By	MM/DD/YY

Client/Project
SEAPORT MANATEE
SOUTH DOCK STREET PAVING
MANATEE COUNTY, FLORIDA

TEMPORARY TRAFFIC CONTROL PLAN GENERAL NOTES

RS&H, INC.
1715 N. WESTSHORE BLVD.
SUITE 600
TAMPA, FL 33607
813-289-5550

Permit-Seal

MCPA Project Number:	ITB-20260127-5
Project Number:	100443340006
SCALE:	N/A

JJG	AJB	AJB	06.12.25
Dwn.	Chkd.	Dsgn.	MM.DD.YY

Drawing No. C58

Revision	Sheet
0	58 of 80

THE OFFICIAL RECORD OF THIS SHEET IS THE ELECTRONIC FILE DIGITALLY SIGNED AND SEALED UNDER RULE 61G15-23.004, F.A.C.

P:\Manatee_Co_Port_Auth\100443340006_Gtr_South_Dock_StreetRoadway\TCGNR001.dgn, TCGENERALNOTES
6/15/2026
11:58:37 AM
DynEA

ORIGINAL SHEET - ANSI B

EXHIBIT B

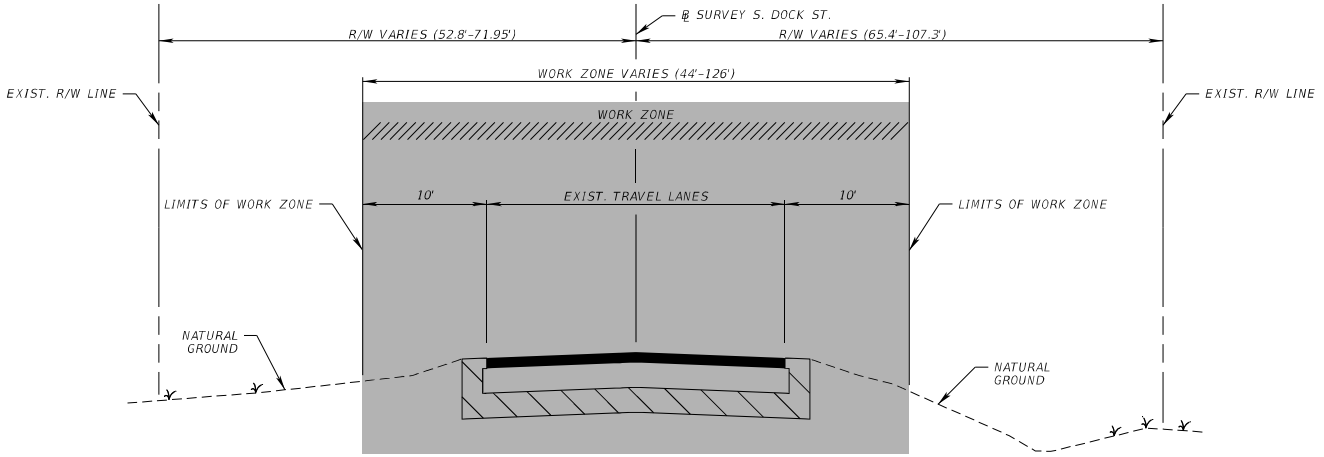

TEMPORARY TRAFFIC CONTROL
TYPICAL SECTION - PHASE IIA
SOUTH DOCK STREET FULL CLOSURE
STA. 20+10.22 TO STA. 37+05.34

TYPICAL SECTION - PHASE IIB
SOUTH DOCK STREET FULL CLOSURE
STA. 20+10.22 TO STA. 37+56.01

BID PLANS
14 MAY 2026

SEAPORT Manatee

Revision

Client/Project
SEAPORT MANATEE
SOUTH DOCK STREET PAVING
MANATEE COUNTY, FLORIDA

TEMPORARY TRAFFIC CONTROL TYPICAL SECTION

RS&H
RS&H, INC.
SUITE 600
TAMPA, FL 33607
813-289-5550

Permit-Seal

MCPA Project Number:	ITB-20260127-5
Project Number:	10044334006
SCALE:	1" = 40'

Des.	Chkd.	Dsgn.	MM.DD.YY
JJG	AJB	AJB	10.09.25

Drawing No. C59

Revision	Sheet
0	59 of 80

THE OFFICIAL RECORD OF THIS SHEET IS THE ELECTRONIC FILE SIGNED AND SEALED UNDER RULE 61G15-23.004, F.A.C.

P:\Manatee_Co_Port_Auth\10044334006_Gtr_South_Dock_Street\Roadway\TCTYRD01.dgn : TCTYRD01
6/15/2026
11:58:38 AM
DynEA

ORIGINAL SHEET - ANSI B

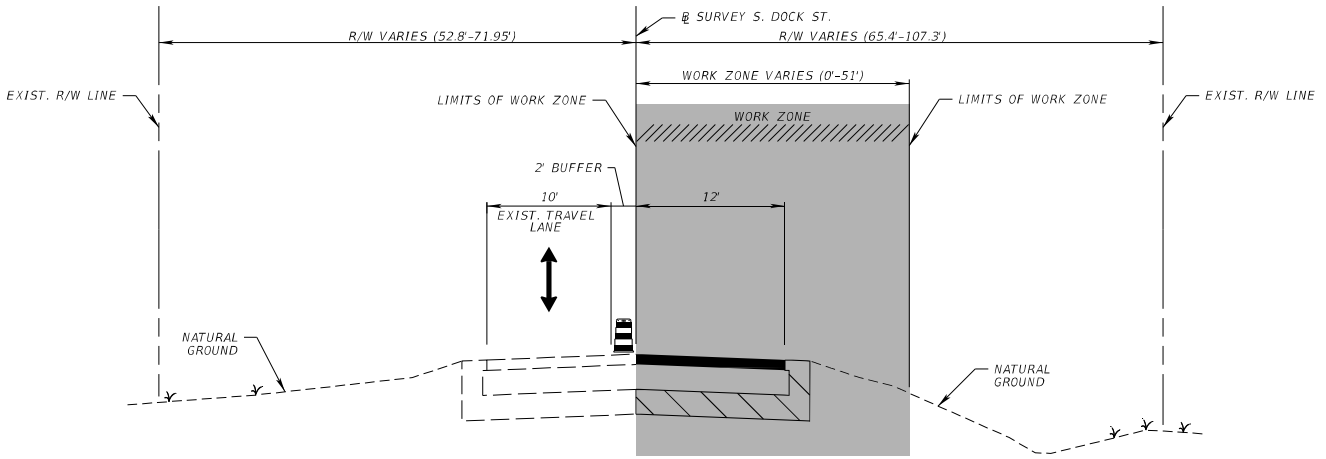

TEMPORARY TRAFFIC CONTROL
TYPICAL SECTION PHASE IIA
SOUTH DOCK STREET
TWO-WAY, ONE LANE CONFIGURATION
STA. 37+17.38 TO STA. 44+52.26

EXHIBIT B

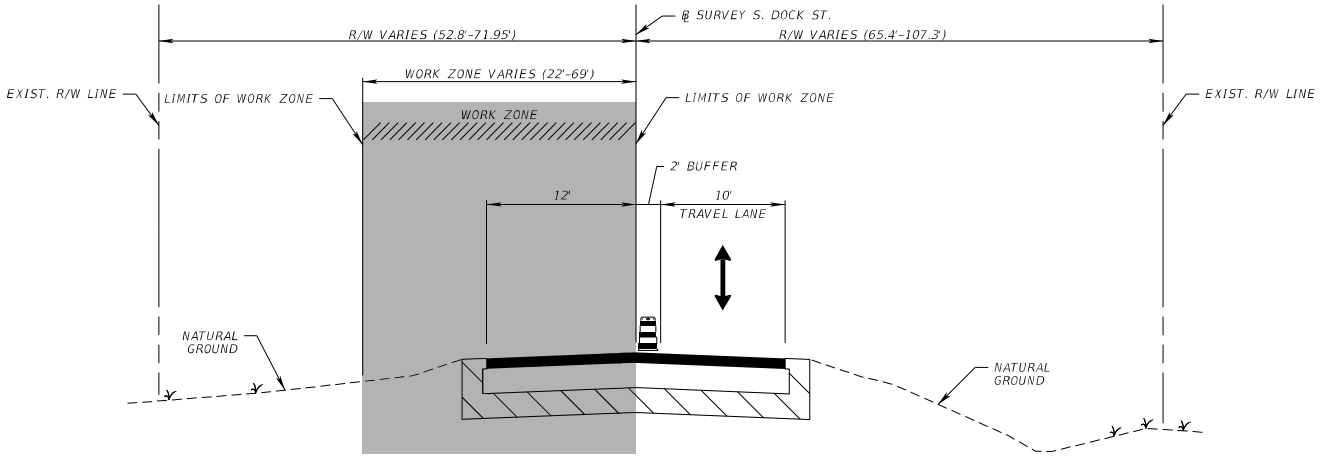

TEMPORARY TRAFFIC CONTROL
TYPICAL SECTION PHASE IIB
SOUTH DOCK STREET
TWO-WAY, ONE LANE CONFIGURATION
STA. 37+56.01 TO STA. 44+52.26

BID PLANS
14 MAY 2026

SEAPORT Manatee

Client/Project
SEAPORT MANATEE
SOUTH DOCK STREET PAVING
MANATEE COUNTY, FLORIDA

TEMPORARY TRAFFIC CONTROL TYPICAL SECTION

Revision

RS&H
RS&H, INC.
TAMPA, FL 33607
813-289-5550

Permit-Seal

MCPA Project Number: ITB-20260127-5
Project Number: 10044334006
SCALE: 1" = 40'

JJG	AJB	AJB	10.09.25
Dsn.	Chkd.	Dsgn.	MM.DD.YY

Drawing No. C60

Revision	Sheet
0	60 of 80

THE OFFICIAL RECORD OF THIS SHEET IS THE ELECTRONIC FILE WHICH IS DIGITALLY SIGNED AND SEALED UNDER RULE 61G15-23.004, F.A.C.

P:\Manatee_Co_Port_Auth\10044334006_Gtr_South_Dock_Street\Roadway\TCTYRD02.dgn : TCTYRD02
6/15/2026
11:58:37 AM
DynEA

ORIGINAL SHEET - ANSI B

EXHIBIT B

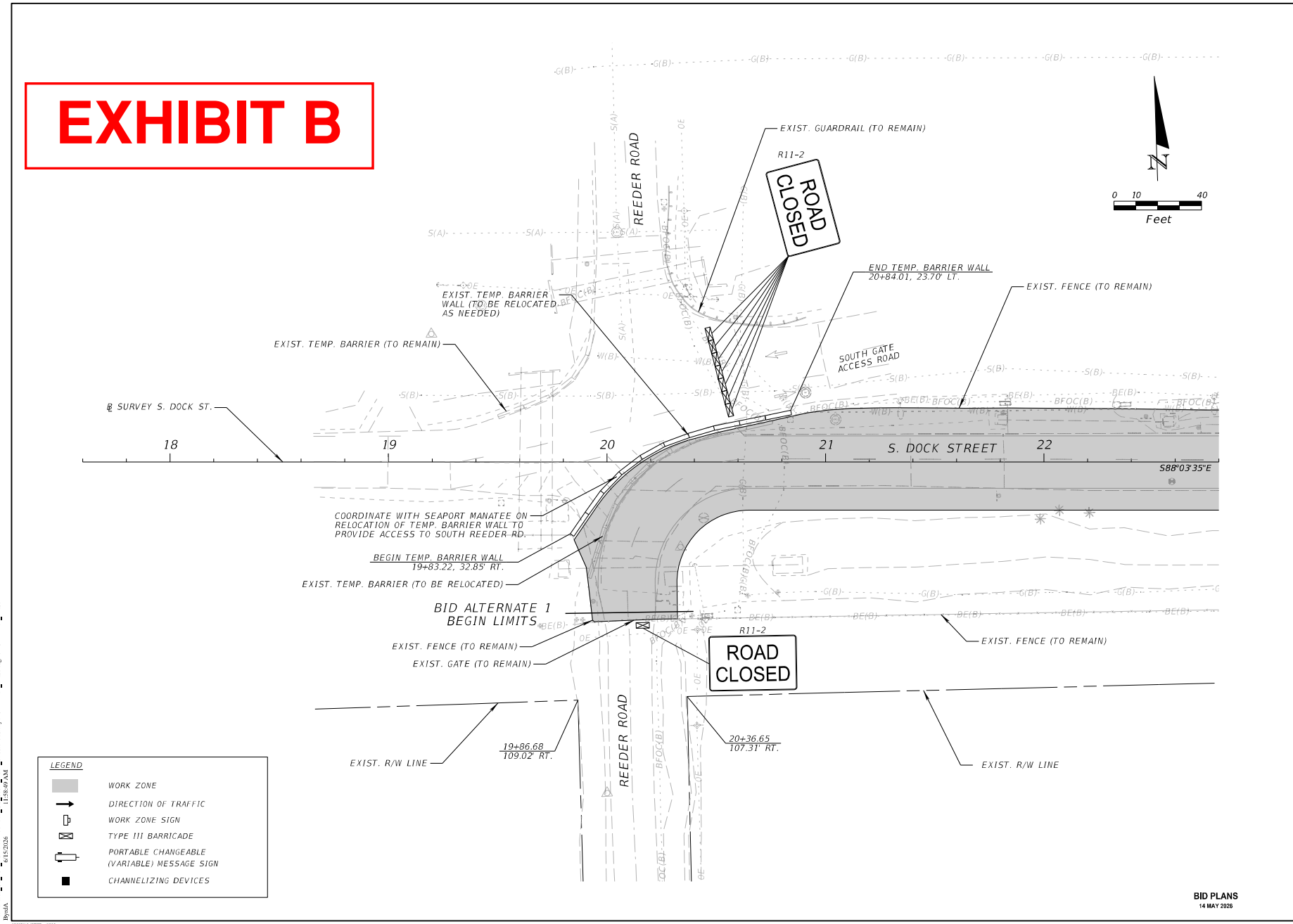

SEAPORT Manatee

Client/Project
SEAPORT MANATEE
SOUTH DOCK STREET PAVING
MANATEE COUNTY, FLORIDA
TEMPORARY TRAFFIC CONTROL PLAN PHASE IIA

Revision

RS&H
RS&H, INC.
1715 N. WESTSHORE BLVD
SUITE 600
TAMPA, FL 33607
813-289-5550

Permit-Seal

MCPA Project Number:	ITB-20260127-5
Project Number:	10044334006
SCALE:	1" = 40'

JEL	AJB	AJB	09.29.25
Dwn.	Chkd.	Dsgn.	MM.DD.YY

Drawing No. C61

Revision 0 Sheet 61 of 80

THE OFFICIAL RECORD OF THIS SHEET IS THE ELECTRONIC FILE INITIALLY SIGNED AND SEALED UNDER RULE 61G15-23.004, F.A.C.

P:\Manatee_Co_Port_Auth\10044334006_GC_South_Dock_Street\Roadway\TCPLRD01_Phase1.dgn : TCPLRD01_Phase1
ByrdA 6/15/2026 11:58:40 AM
ORIGINAL SHEET - ANSI B

EXHIBIT B

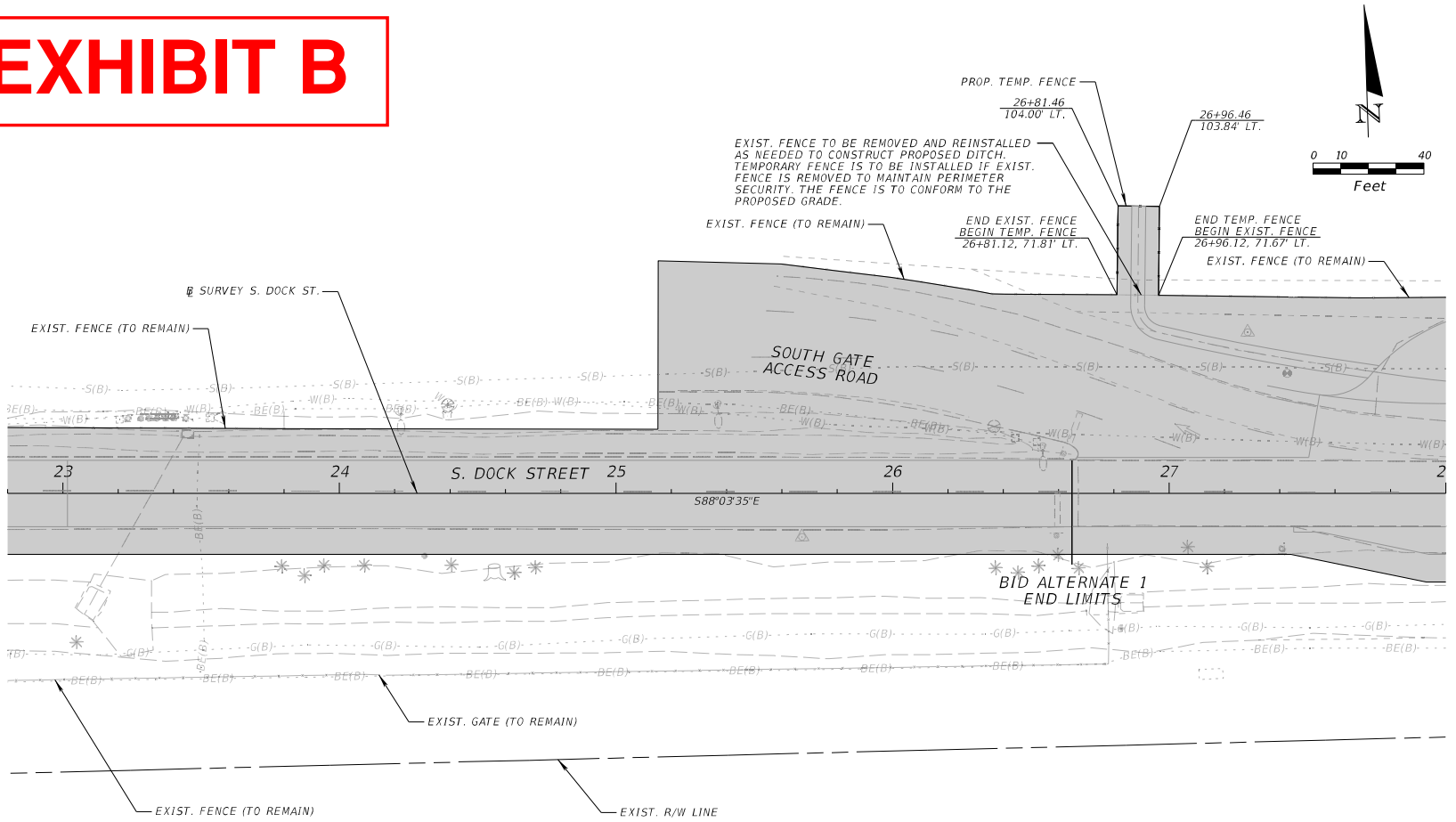

LEGEND

- WORK ZONE
- DIRECTION OF TRAFFIC
- WORK ZONE SIGN
- TYPE III BARRICADE
- PORTABLE CHANGEABLE (VARIABLE) MESSAGE SIGN
- CHANNELIZING DEVICES

BID PLANS
14 MAY 2026

SEAPORT Manatee

Revision

Client/Project
SEAPORT MANATEE
SOUTH DOCK STREET PAVING
MANATEE COUNTY, FLORIDA

TEMPORARY TRAFFIC CONTROL PLAN PHASE IIA

RS&H
RS&H, INC.
TAMPA, FL 33607
813-289-5550

Permit-Seal

MCPA Project Number:	ITB-20260127-5
Project Number:	10044334006
SCALE:	1" = 40'

Des.	Chkd.	Dsgn.	MM.DD.YY
JJG	AJB	AJB	06.29.25

Drawing No. C62

Revision	Sheet
0	62 of 80

THE OFFICIAL RECORD OF THIS SHEET IS THE ELECTRONIC FILE SIGNED AND SEALED UNDER RULE 61G15-23.004, F.A.C.

P:\Manatee_Co_Port_Auth\10044334006_Gtr_South_Dock_Street\Roadway\TCP\LRD02_Phase1.dgn : TCPLRD02_Phase1
6/15/2026
11:58:52 AM
ByteA

ORIGINAL SHEET - ANSI B

EXHIBIT B

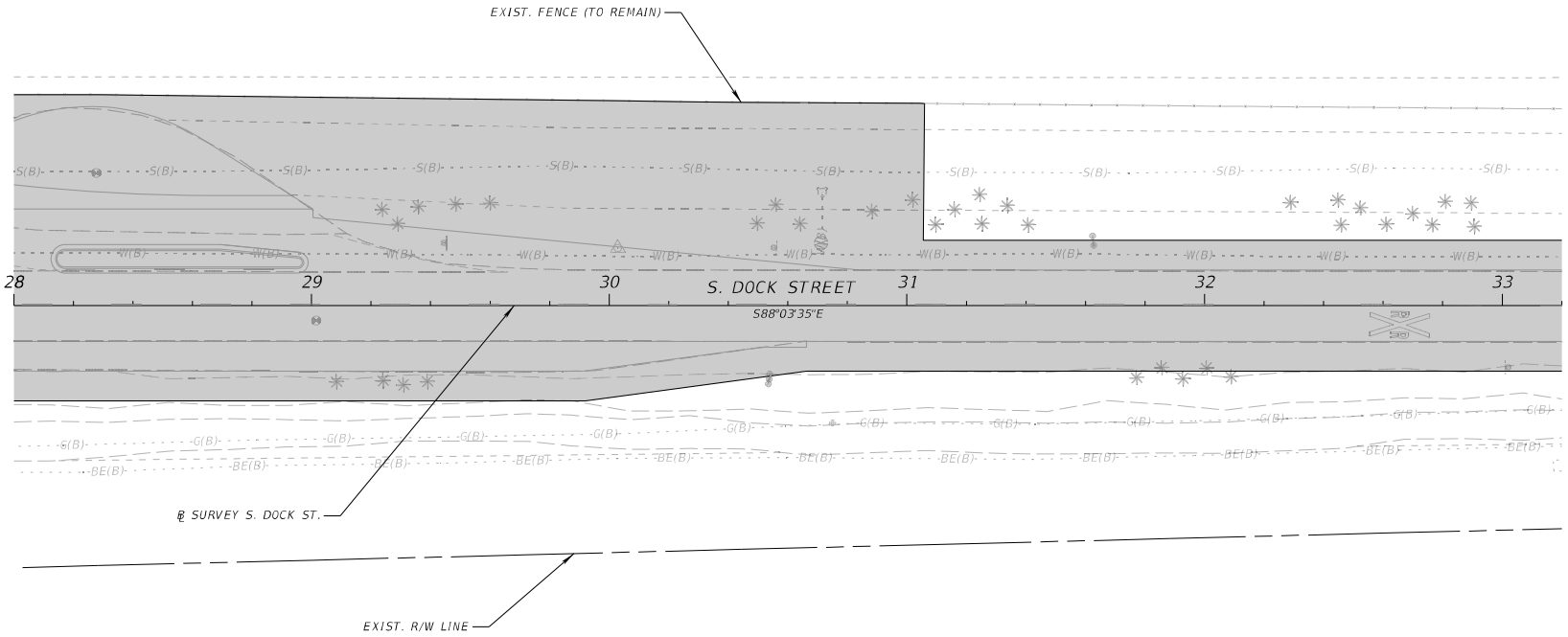

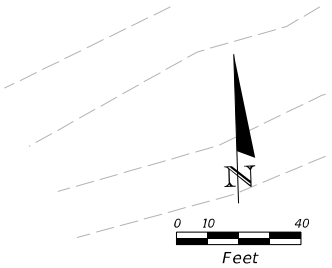

LEGEND

- WORK ZONE
- DIRECTION OF TRAFFIC
- WORK ZONE SIGN
- TYPE III BARRICADE
- PORTABLE CHANGEABLE (VARIABLE) MESSAGE SIGN
- CHANNELIZING DEVICES

BID PLANS
14 MAY 2026

SEAPORT Manatee

Client/Project
SEAPORT MANATEE
SOUTH DOCK STREET PAVING
MANATEE COUNTY, FLORIDA

TEMPORARY TRAFFIC CONTROL PLAN PHASE IIA

Revision

RS&H
RS&H, INC.
TAMPA, FL 33607
813-289-5550

Permit-Seal

MCPA Project Number:	ITB-20260127-5
Project Number:	10044334006
SCALE:	1" = 40'

JJG	AJB	AJB	06.29.25
Dwn.	Chkd.	Dsgn.	MM.DD.YY

Drawing No. C63

Revision	Sheet
0	63 of 80

THE OFFICIAL RECORD OF THIS SHEET IS THE ELECTRONIC FILE WHICH IS DIGITALLY SIGNED AND SEALED UNDER RULE 61G15-23.004, F.A.C.

P:\Manatee_Co_Port_Auth\10044334006_Gtr_South_Dock_Street\Roadway\TCPLRD01_Phase1.dgn : TCPLRD01_Phase1
6/15/2026
11:58:53 AM
By:mtA

ORIGINAL SHEET - ANSI B

EXHIBIT B

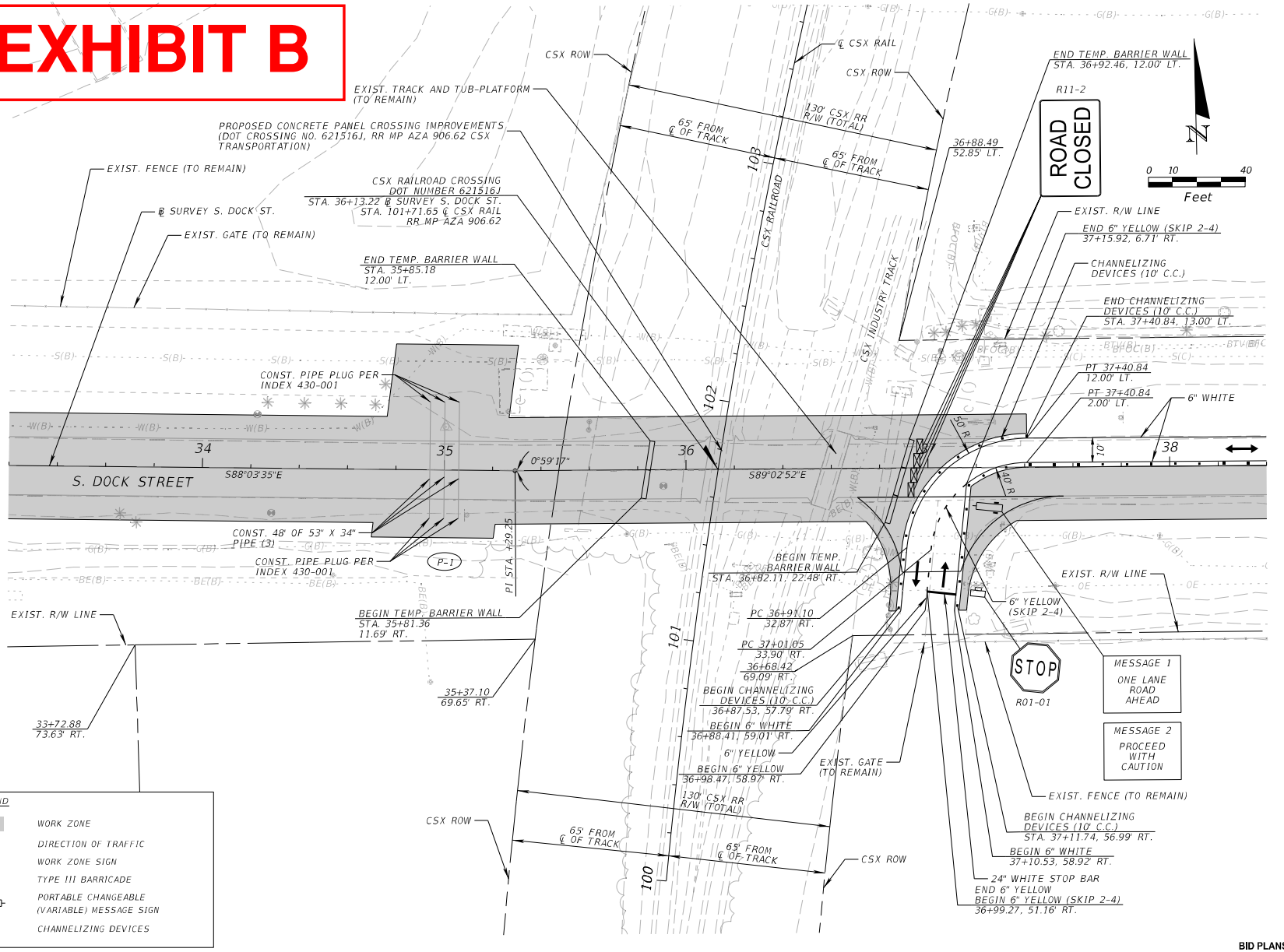

BID PLANS
14 MAY 2026

SEAPORT Manatee

Client/Project
SEAPORT MANATEE
SOUTH DOCK STREET PAVING
MANATEE COUNTY, FLORIDA

TEMPORARY TRAFFIC CONTROL PLAN PHASE IIA

RS&H
RS&H, INC.
1715 N. WESTSHORE BLVD
SUITE 600
TAMPA, FL 33607
813-289-5550

Permit-Seal

MCPA Project Number:	ITB-20260127-5
Project Number:	10044334006
SCALE:	1" = 40'

JEL	AJB	AJB	06.29.25
Dwn.	Chkd.	Dsgn.	MM.DD.YY

Drawing No. C64

Revision	Sheet
0	64 of 80

Revision

THE OFFICIAL RECORD OF THIS SHEET IS THE ELECTRONIC FILE INITIALLY SIGNED AND SEALED UNDER RULE 61G15-23.004, F.A.C.

P:\Manatee_Co_Port_Auth\10044334006_GC_South_Dock_Street\Roadway\TCPLRD01_Phase1.dgn : TCPLRD04_Phase1
ByrdA 6/15/2026 11:58:54 AM
ORIGINAL SHEET - ANSI B

EXHIBIT B

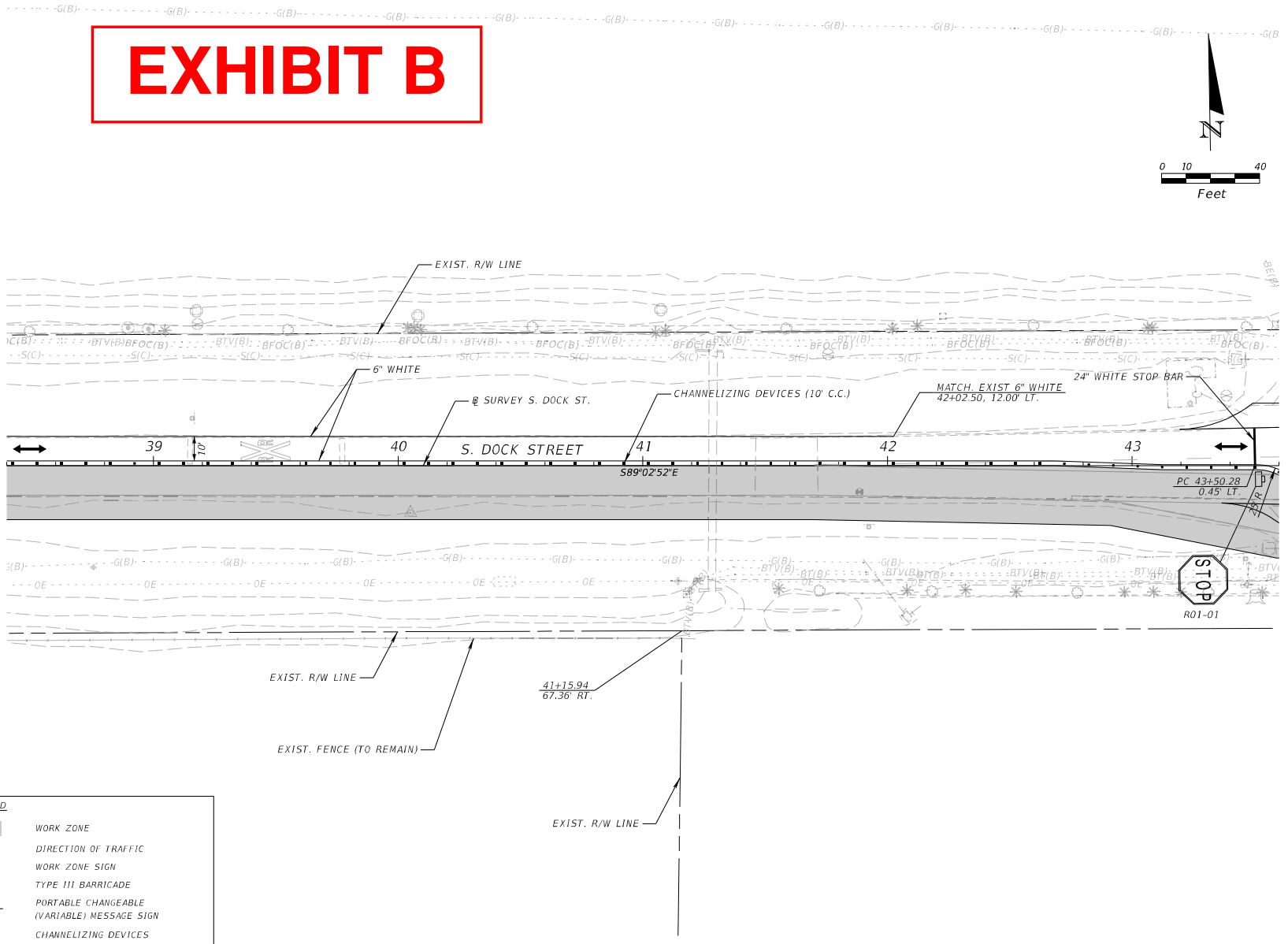

BID PLANS
14 MAY 2026

SEAPORT Manatee

Revision

Client/Project
SEAPORT MANATEE
SOUTH DOCK STREET PAVING
MANATEE COUNTY, FLORIDA
TEMPORARY TRAFFIC CONTROL PLAN PHASE IIA

RS&H

RS&H, INC.
1715 N. WESTSHORE BLVD
SUITE 600
TAMPA, FL 33607
813-289-5550

Permit-Seal

MCPA Project Number: ITB-20260127-5
Project Number: 10044334006
SCALE: 1" = 40'

JEL	AJB	AJB	06.29.25
Dwn.	Chkd.	Dsgn.	MM.DD.YY

Drawing No. C65

Revision 0 Sheet 65 of 80

THE OFFICIAL RECORD OF THIS SHEET IS THE ELECTRONIC FILE INITIALLY SIGNED AND SEALED UNDER RULE 61G15-23.004, F.A.C.

P:\Manatee_Co_Port_Auth\10044334006_GC_South_Dock_Street\Roadway\TCPLRD05_Phase1.dgn : TCPLRD05_Phase1
ByrdA 6/15/2026 11:58:56 AM

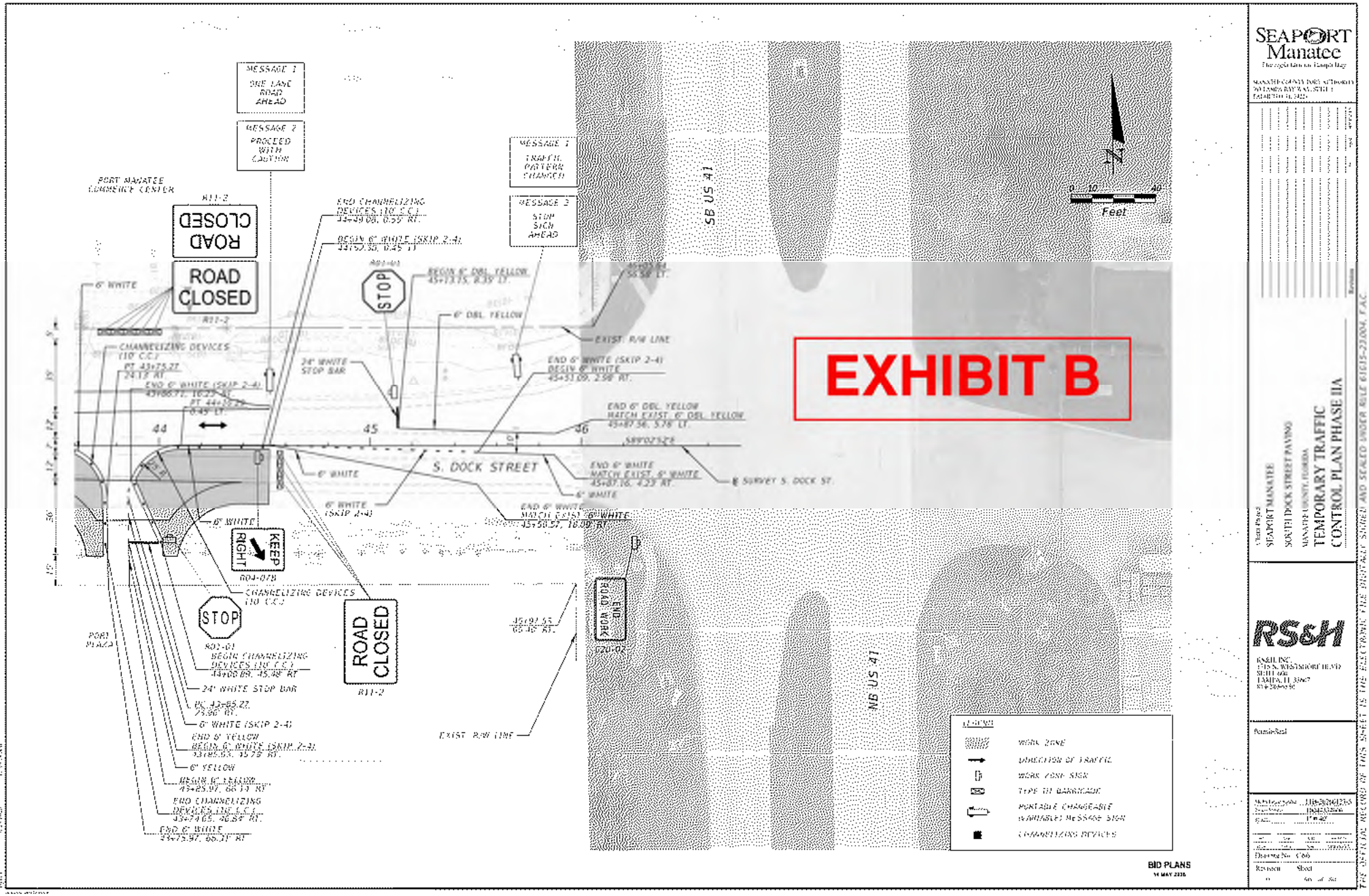

SEAPORT Manatee

The right turn on Tampa Bay

MANATEE COUNTY PORT AUTHORITY
300 TAMPA BAY WAY, SUITE 1
BRADENTON, FL 34220

Client Project
SEAPORT MANATEE
SOUTH DOCK STREET PAVING
MANATEE COUNTY, FLORIDA

TEMPORARY TRAFFIC CONTROL PLAN PHASE IIA

RS&H

RS&H, INC.
1715 N. WESTSHORE BLVD
SUITE 600
TAMPA, FL 33607

Permit Seal

Drawing No. C66

Revision Sheet

THE OFFICIAL RECORD OF THIS SHEET IS THE ELECTRONIC FILE DIGITALLY SIGNED AND SEALED UNDER RULE 61G15-23.004, F.A.C.

EXHIBIT B

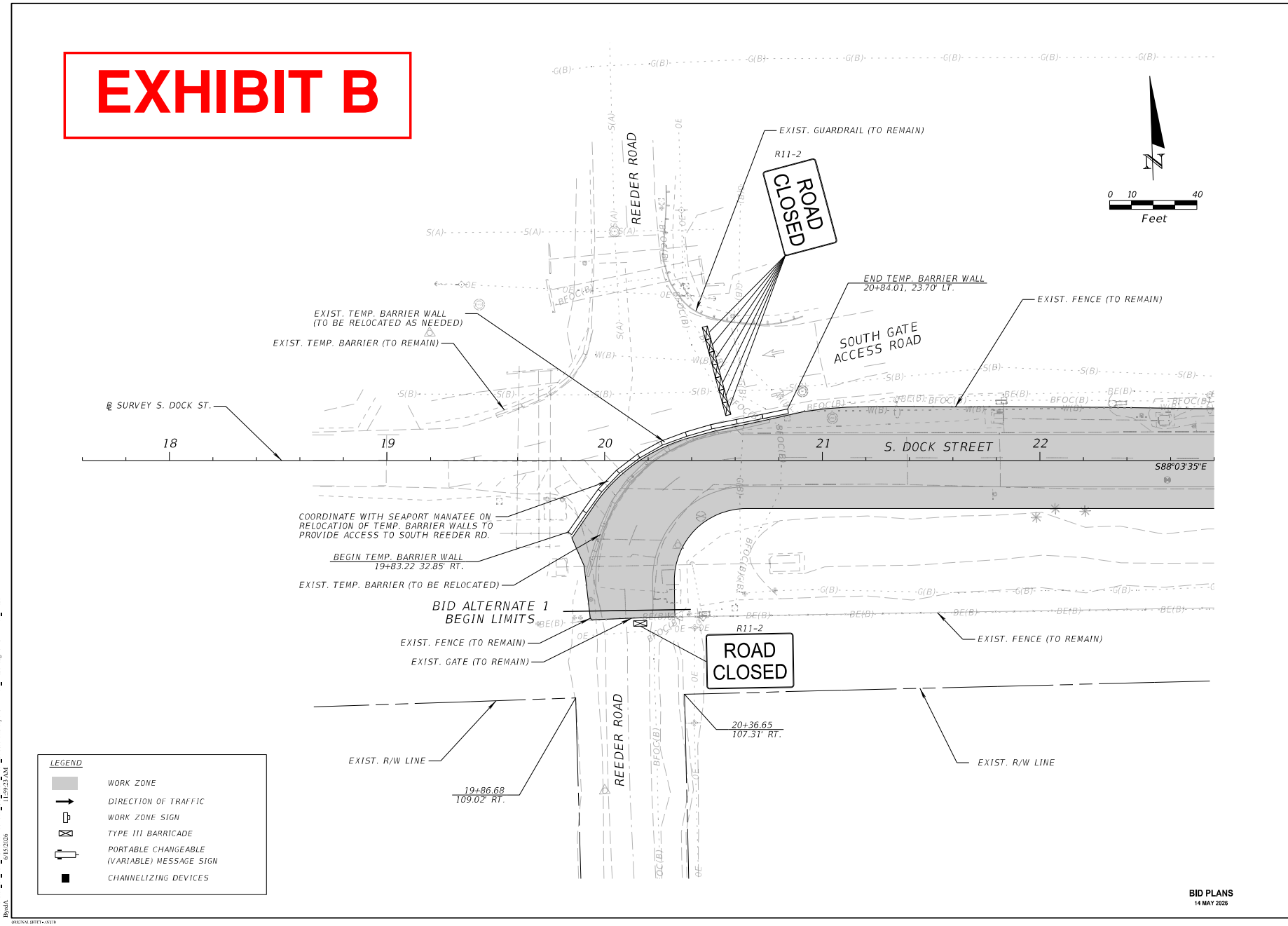

SEAPORT Manatee

Client/Project
SEAPORT MANATEE
SOUTH DOCK STREET PAVING
MANATEE COUNTY, FLORIDA
TEMPORARY TRAFFIC
CONTROL PLAN PHASE IIB

Revision

RS&H

RS&H, INC.
1715 N. WESTSHORE BLVD
SUITE 600
TAMPA, FL 33607
813-289-5550

Permit-Seal

MCPA Project Number: ITB-20260127-5
Project Number: 10044334006
SCALE: 1" = 40'

JEL	AJB	AJB	06.29.25
Dwn.	Chkd.	Dsgn.	MM.DD.YY

Drawing No. C67

Revision 0 Sheet 67 of 80

THE OFFICIAL RECORD OF THIS SHEET IS THE ELECTRONIC FILE INITIALLY SIGNED AND SEALED UNDER RULE 61G15-23.004, F.A.C.

P:\Manatee_Co_Port_Auth\10044334006_GC_South_Dock_Street\Roadway\TCPLRD01_Phase1I.dgn : TCPLRD01_Phase1I
ByrdA 6/15/2026 11:59:23 AM

EXHIBIT B

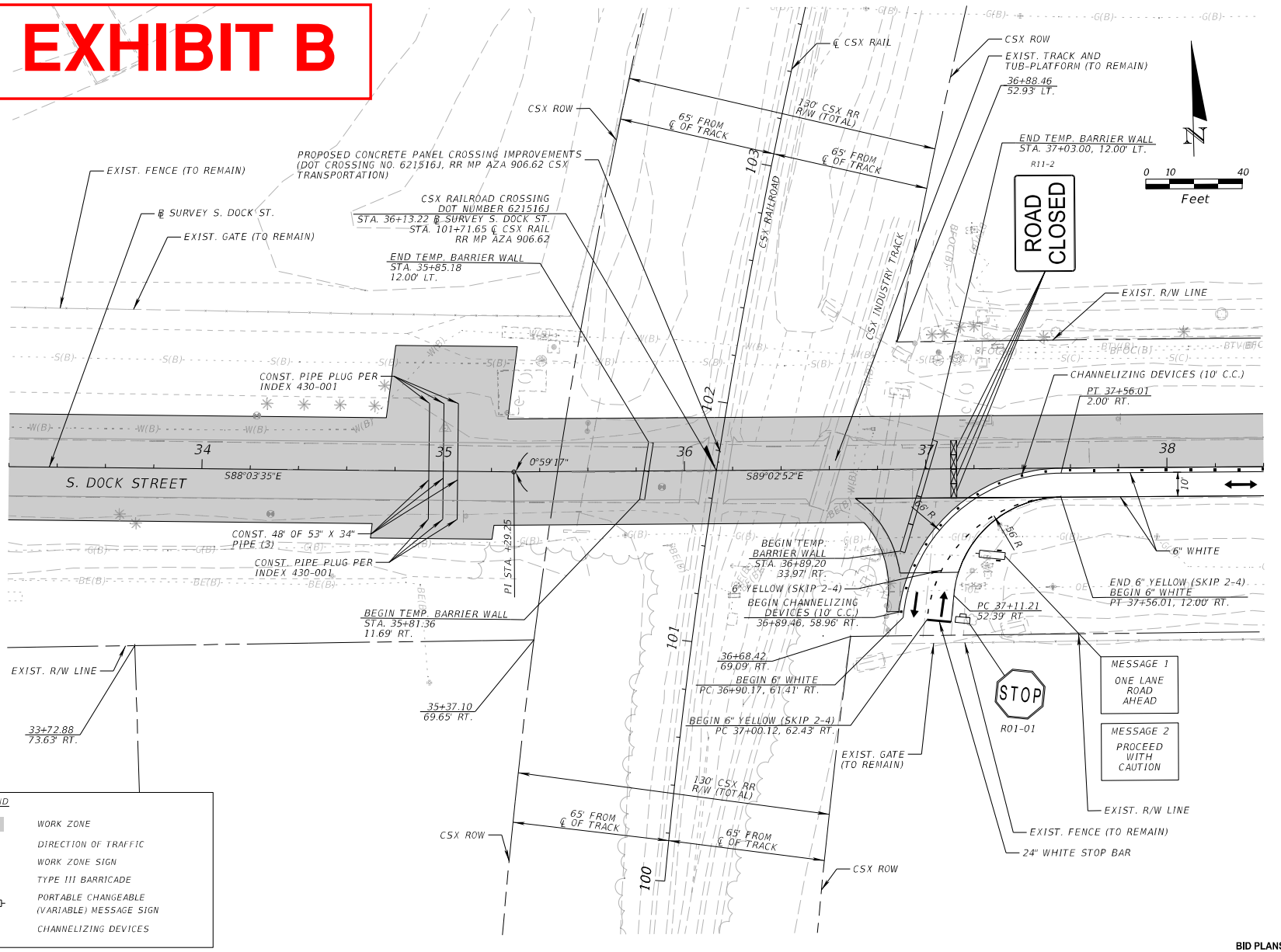

BID PLANS
14 MAY 2026

SEAPORT Manatee

Client/Project
SEAPORT MANATEE
SOUTH DOCK STREET PAVING
MANATEE COUNTY, FLORIDA

TEMPORARY TRAFFIC CONTROL PLAN PHASE IIB

Revision

RS&H
RS&H, INC.
1715 N. WESTSHORE BLVD.
SUITE 600
TAMPA, FL 33607
813-289-5550

Permit-Seal

MCPA Project Number:	ITB-20260127-5
Project Number:	10044334006
SCALE:	1" = 40'

JEL	AJB	AJB	06.29.25
Dwn.	Chkd.	Dsgn.	MM.DD.YY

Drawing No. C68

Revision	Sheet
0	68 of 80

THE OFFICIAL RECORD OF THIS SHEET IS THE ELECTRONIC FILE INITIALLY SIGNED AND SEALED UNDER RULE 61G15-23.004, F.A.C.

P:\Manatee_Co_Port_Auth\10044334006_GC_South_Dock_Street\Roadway\TCPLRD04_Phase1I.dgn : TCPLRD04_Phase1I
ByrdA 6/15/2026 11:59:25 AM

EXHIBIT B

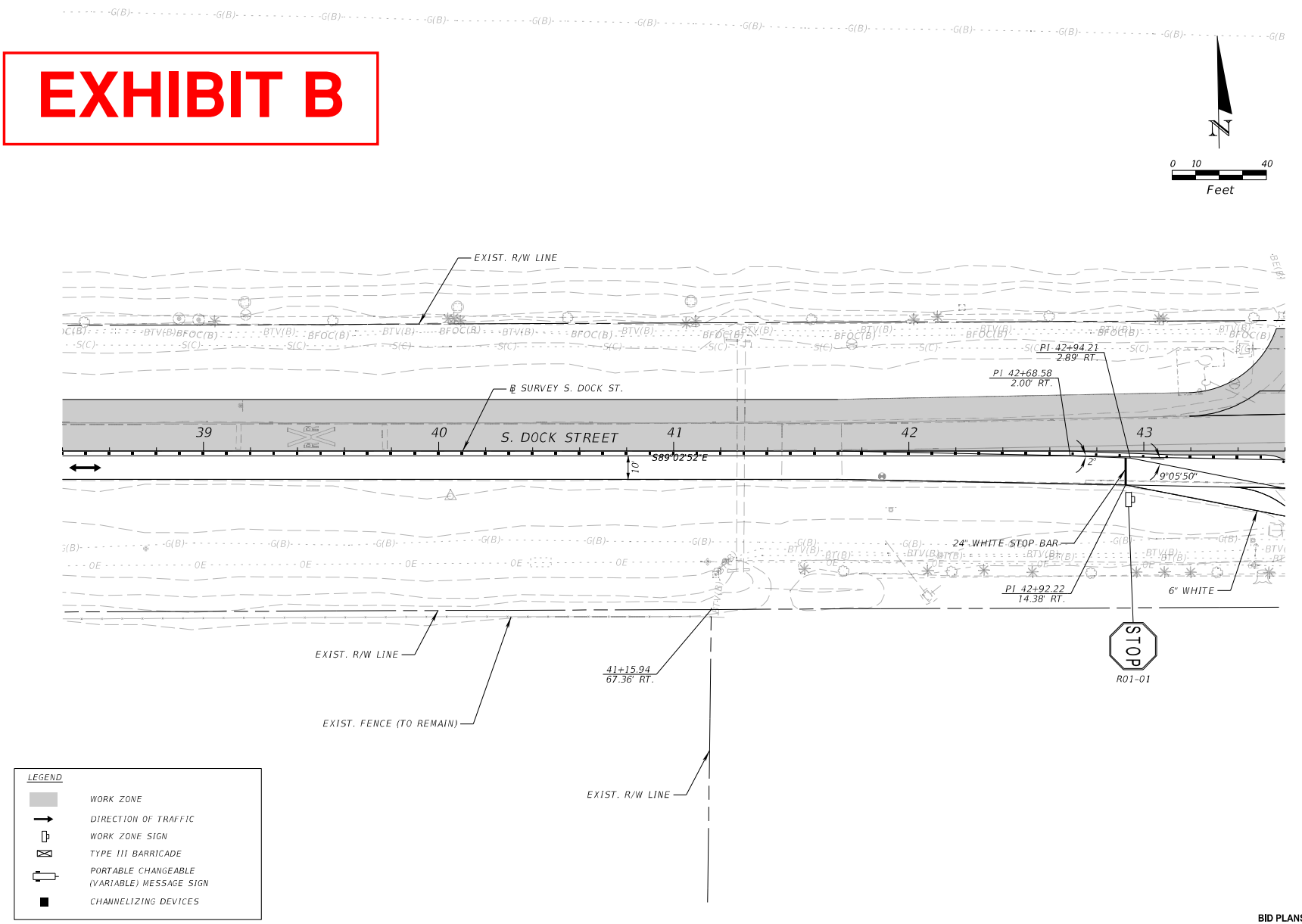

BID PLANS
14 MAY 2026

SEAPORT Manatee

Client/Project
SEAPORT MANATEE
SOUTH DOCK STREET PAVING
MANATEE COUNTY, FLORIDA
TEMPORARY TRAFFIC CONTROL PLAN PHASE IIB

RS&H
RS&H, INC.
1715 N. WESTSHORE BLVD
SUITE 600
TAMPA, FL 33607
813-289-5550

Permit-Seal

MCPA Project Number:	ITB-20260127-5
Project Number:	10044334006
SCALE:	1" = 40'

JEL	AJB	AJB	09.29.25
Dwn.	Chkd.	Dsgn.	MM.DD.YY

Drawing No. C69

Revision	Sheet
0	69 of 80

THE OFFICIAL RECORD OF THIS SHEET IS THE ELECTRONIC FILE INITIALLY SIGNED AND SEALED UNDER RULE 61G15-23.004, F.A.C.

P:\Manatee_Co_Port_Auth\10044334006_GC_South_Dock_Street\Roadway\TCPLRD05_Phase1.dgn : TCPLRD05_Phase1I
ByrdA 6/15/2026 11:59:26 AM

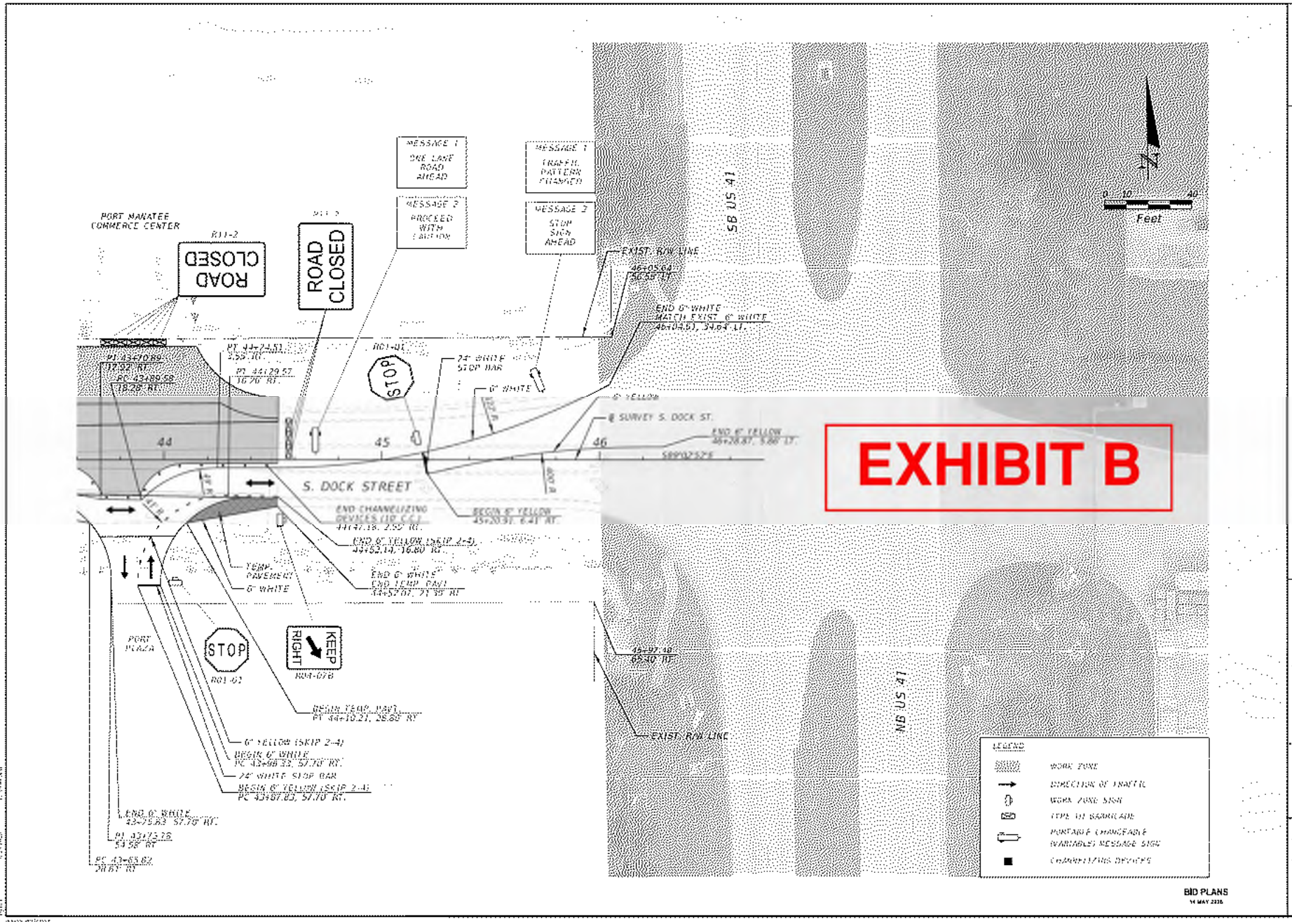
EXHIBIT B
PORT MANATEE COMMERCE CENTER
R11-2
ROAD CLOSED
ROAD CLOSED
MESSAGE 1 ONE LANE ROAD AHEAD
MESSAGE 2 PROCEED WITH CAUTION
MESSAGE 1 TRAFFIC PATTERN CHANGED
MESSAGE 2 STOP SIGN AHEAD
SB US 41
NB US 41
EXIST. R/W LINE
END 6" WHITE MATCH EXIST. 6" WHITE
24" WHITE STOP BAR
6" WHITE
6" YELLOW
℄ SURVEY S. DOCK ST.
END 6" YELLOW
S. DOCK STREET
END CHANNELIZING DEVICES (10' C.C.)
BEGIN 6" YELLOW
END 6" YELLOW (SKIP 2-4)
TEMP. PAVEMENT
6" WHITE
END 6" WHITE END TEMP. PAVT.
PORT PLAZA
STOP
KEEP RIGHT
BEGIN TEMP. PAVT.
6" YELLOW (SKIP 2-4)
BEGIN 6" WHITE
24" WHITE STOP BAR
BEGIN 6" YELLOW (SKIP 2-4)
END 6" WHITE
EXIST. R/W LINE
LEGEND
WORK ZONE
DIRECTION OF TRAFFIC
WORK ZONE SIGN
TYPE III BARRICADE
PORTABLE CHANGEABLE (VARIABLE) MESSAGE SIGN
CHANNELIZING DEVICES
0 10 40
Feet
BID PLANS
14 MAY 2026
SEAPORT Manatee
Client Project
SEAPORT MANATEE
SOUTH DOCK STREET PAVING
MANATEE COUNTY, FLORIDA
TEMPORARY TRAFFIC CONTROL PLAN PHASE IIB
RS&H
Permit-Seal
Drawing No. C70
Revision
Sheet

EXHIBIT B

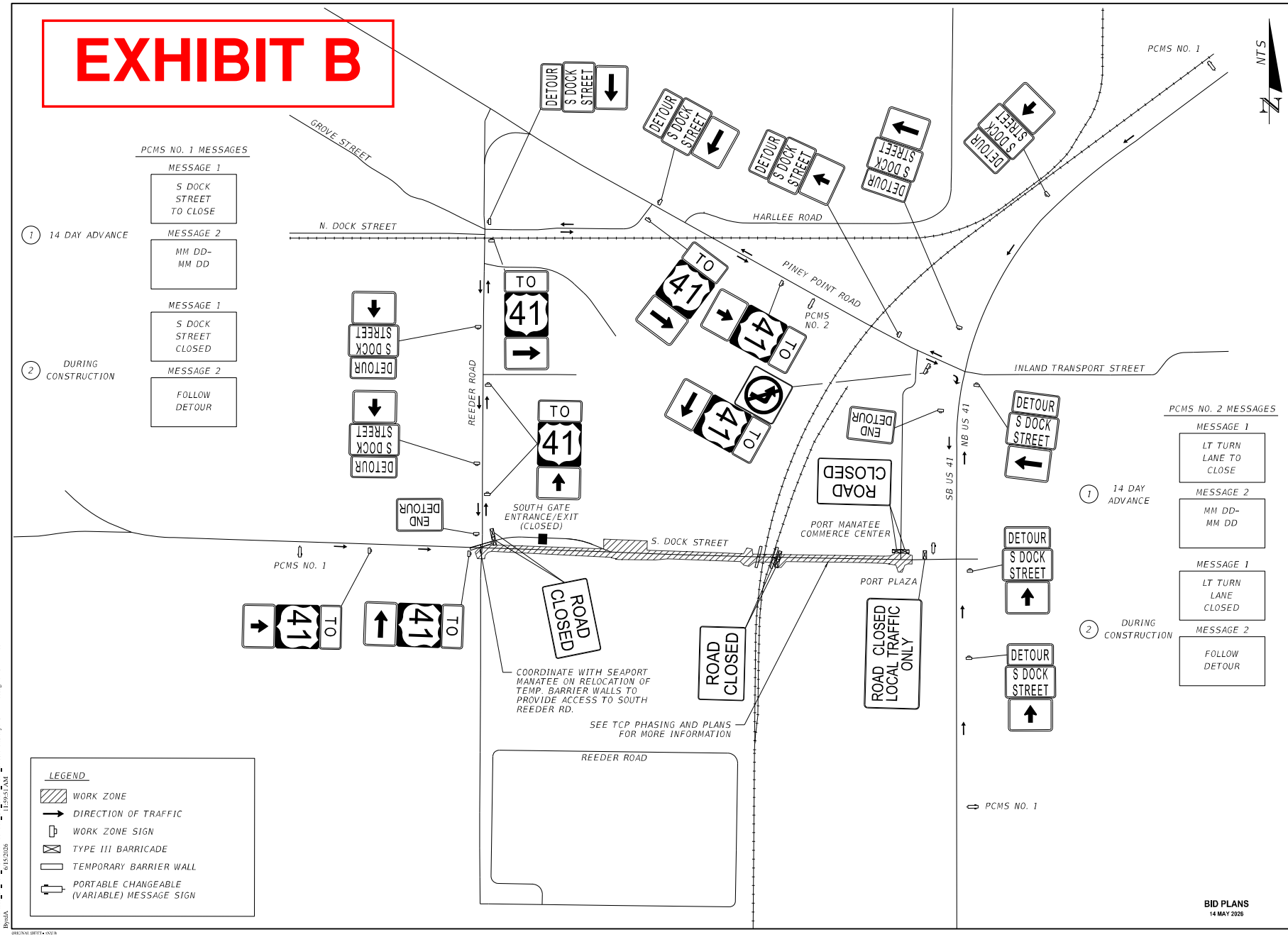

BID PLANS
14 MAY 2026

SEAPORT Manatee

RS&H
RS&H, INC.
TAMPA, FL 33607
813-289-5550

Client/Project
SEAPORT MANATEE
SOUTH DOCK STREET PAVING
MANATEE COUNTY, FLORIDA

TEMPORARY TRAFFIC CONTROL PLAN DETOUR

Revision

Permit-Seal

MCPA Project Number: ITB-20260127-5
Project Number: 10044334006
SCALE: N/A
Drawing No. C71
Revision 0
Sheet 71 of 80

THE OFFICIAL RECORD OF THIS SHEET IS THE ELECTRONIC FILE DIGITALLY SIGNED AND SEALED UNDER RULE 61G15-23.004, F.A.C.

P:\Manatee_Co_Port_Auth\10044334006_Gtr_South_Dock_Street\Roadway\TCD\TR003.dgn : TCDTR003
6/15/2026 11:59:57 AM
DynEA

ORIGINAL SHEET - ANSI B

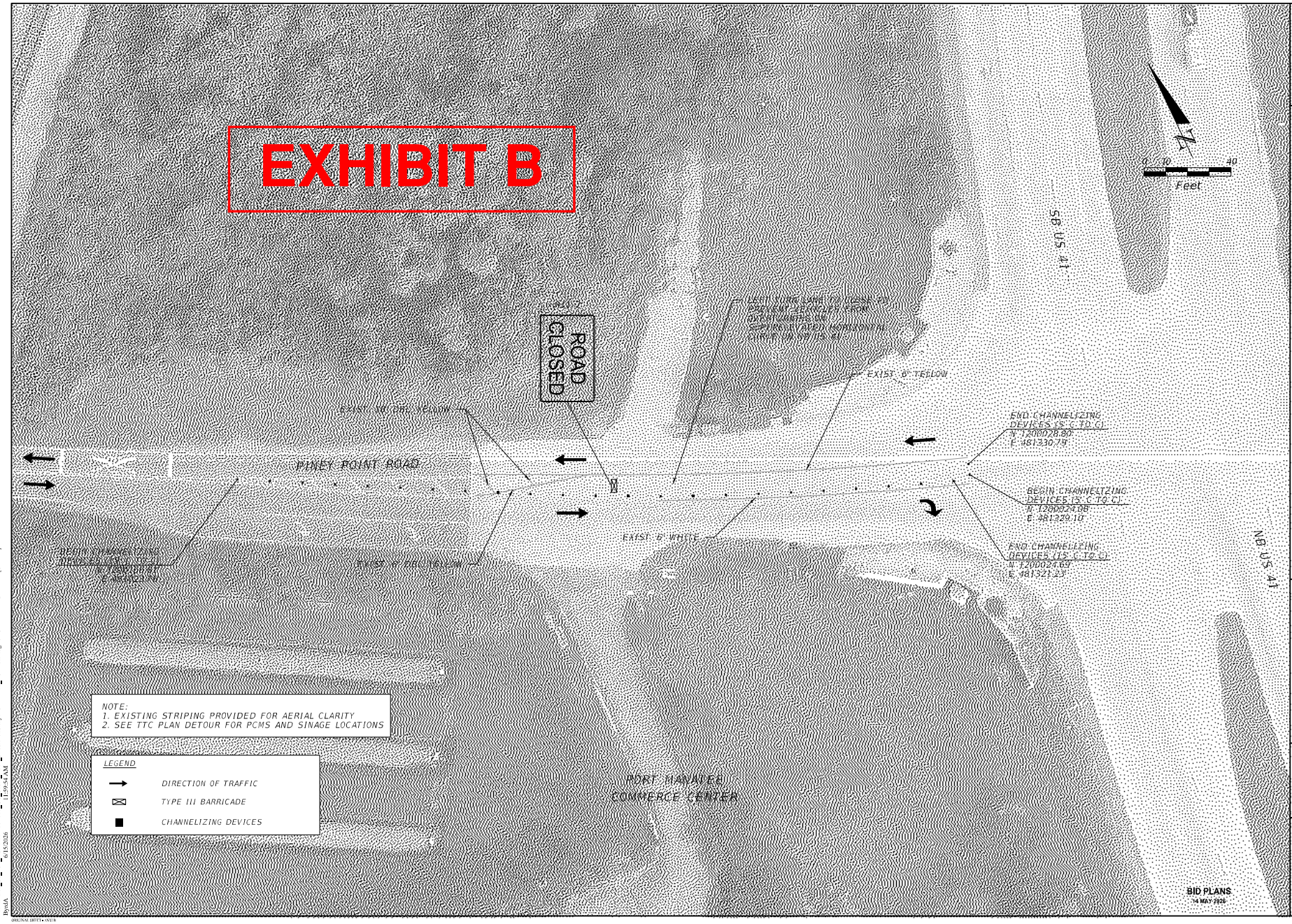

SEAPORT Manatee

MANATEE COUNTY PORT AUTHORITY
300 TAMPA BAY WAY, SUITE 1
PALMETTO, FL 34221

Revision	By	Appd.	MM/DD/YY

Client/Project
SEAPORT MANATEE
SOUTH DOCK STREET PAVING
MANATEE COUNTY, FLORIDA

TEMPORARY TRAFFIC CONTROL PLAN DETAIL

RS&H

RS&H, INC.
1715 N. WESTSHORE BLVD.
SUITE 600
TAMPA, FL 33607
813-289-5550

Permit-Seal

MCPA Project Number:	ITB-20260127-5
Project Number:	10044334006
SCALE:	1" = 40'

SNM	AJB	AJB	03.18.25
Dwn.	Chkd.	Dsgn.	MM.DD.YY

Drawing No. C72

Revision 0 Sheet 72 of 80

THE OFFICIAL RECORD OF THIS SHEET IS THE ELECTRONIC FILE DIGITALLY SIGNED AND SEALED UNDER RULE 61G15-23.004, F.A.C.

P:\Manatee_Co_Port_Auth\10044334006_GC_South_Dock_Street\Roadway\TCPLRD00_TCPDetail.dgn : TCP DETAIL SHEET-1 [SHEET]
ByrdA 6/15/2026 11:59:54 AM
ORIGINAL SHEET - 8.5X11

EXHIBIT B

Summary of Signing & Pavement Marking Pay Items

Pay Item Number	Pay Item Description	Unit of Measure	TOTAL	
			BID ALTERNATE 1	FINAL
0700 1500	Single Column Ground Sign Assembly, Relocate	EA	1	
0700 3101	Sign Panel, Furnish & Install Ground Mount, Up To 12 SF	EA	1	
0706 1 3	Raised Pavement Marker, Type B	EA	48	
0711 11125	Thermoplastic, Standard, White, Solid, 24 For Crosswalk And Stop Bar	LF	12	
0711 11224	Thermoplastic, Standard, Yellow, Solid, 18 For Diagonal Or Chevrons	LF	33	
0711 15101	Thermoplastic, Standard - Open Graded Asphalt Surfaces, White, Solid, 6	GM	0.265	
0711 15201	Thermoplastic, Standard - Open Graded Asphalt Surfaces, Yellow, Solid, 6	GM	0.265	

Summary of Signing & Pavement Marking Pay Items

Pay Item Number	Pay Item Description	Unit of Measure	TOTAL	
			PROJECT	FINAL
0700 1111	Single Column Ground Sign Assembly, F&I Ground Mount, Less Than 12 SF	EA	4	
0700 1500	Single Column Ground Sign Assembly, Relocate	EA	6	
0700 1600	Single Column Ground Sign Assembly, Remove	EA	3	
0700 2500	Multi-Column Ground Sign Assembly, Relocate	EA	1	
0700 3101	Sign Panel, Furnish & Install Ground Mount, Up To 12 SF	EA	2	
0700 3601	Sign Panel, Remove, Up To 12 SF	EA	2	
0706 1 3	Raised Pavement Marker, Type B	EA	195	
0710 11190	Painted Pavement Markings, Standard, White, Island Nose	SF	6	
0710 90	Painter Pavement Markings, Final Surface	LS	1	
0711 11124	Thermoplastic, Standard, White, Solid, 18" For Diagonals And Chevrons	LF	43	
0711 11141	Thermoplastic, Standard, White, Solid, 2-4 Dotted Guideline/ 6-10 Gap Extension, 6"	GM	0.043	
0711 11125	Thermoplastic, Standard, White, Solid, 24 For Crosswalk And Stop Bar	LF	81	
0711 11160	Thermoplastic, Standard, White, Message Or Symbol	EA	2	
0711 11224	Thermoplastic, Standard, Yellow, Solid, 18 For Diagonal Or Chevrons	LF	319	
0711 11241	Thermoplastic, Standard, Yellow, 2-4 Dotted Guide Line /6-10 Dotted Extension Line, 6"	GM	0.030	
0711 14193	Thermoplastic, Preformed, 12" White On Asphalt Pavement, Railroad Dynamic Envelope	LF	154	
0711 15101	Thermoplastic, Standard - Open Graded Asphalt Surfaces, White, Solid, 6	GM	0.693	
0711 15102	Thermoplastic, Standard - Open Graded Asphalt Surfaces, White, Solid, 8	GM	0.028	
0711 15131	Thermoplastic, Standard-Open Graded Asphalt Surfaces, White, Skip, 6",10-30 Skip Or 3-9 Lane Drop	GM	0.054	
0711 15201	Thermoplastic, Standard - Open Graded Asphalt Surfaces, Yellow, Solid, 6	GM	0.838	

BID PLANS
14 MAY 2026

SEAPORT Manatee
The Gulf Coast Gateway

MANATEE COUNTY PORT AUTHORITY
300 TAMPA BAY WAY, SUITE 1
PALMETTO, FL 34221

Revision	By	Appd.	MM/DD/YY

Client/Project
SEAPORT MANATEE
SOUTH DOCK STREET PAVING
MANATEE COUNTY, FLORIDA

TABULATION OF QUANTITIES

RS&H

RS&H, INC.
1715 N. WESTSHORE BLVD.
SUITE 600
TAMPA, FL 33607
813-289-5550

Permit-Seal

MCPA Project Number:	ITB-20260127-5
Project Number:	10044334006
SCALE:	N/A

JFL	AJB	AJB	10.06.25
Dwn.	Chkd.	Dsgn.	MM.DD.YY

Drawing No. C73

Revision 0 Sheet 73 of 80

THE OFFICIAL RECORD OF THIS SHEET IS THE ELECTRONIC FILE DIGITALLY SIGNED AND SEALED UNDER RULE 61G15-23.004, F.A.C.

P:\Manatee_Co_Port_Auth\10044334006_GC_South_Dock_Street\Roadway\SIGNRD01.dgn : SIGNRD01
ByrdA 6/15/2026 12:00:01 PM
ORIGINAL SHEET - ANSI B

EXHIBIT B

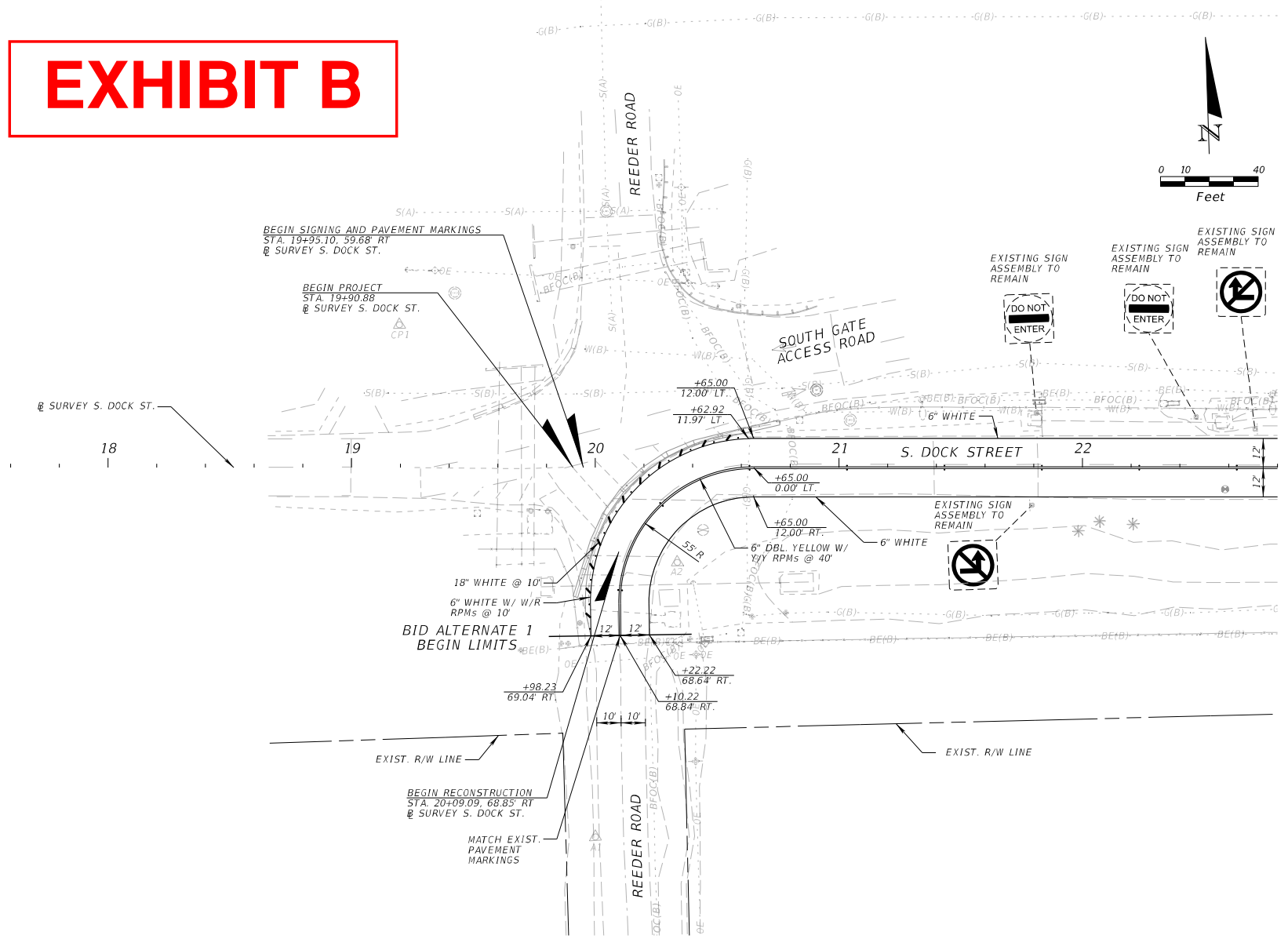

BID PLANS
14 MAY 2026

SEAPORT Manatee

Client/Project
SEAPORT MANATEE
SOUTH DOCK STREET PAVING
MANATEE COUNTY, FLORIDA
SIGNING AND PAVEMENT MARKING PLAN

RS&H
RS&H, INC.
1715 N. WESTSHORE BLVD
SUITE 600
TAMPA, FL 33607
813-289-5550

Permit-Seal

MCPA Project Number:	ITB-20260127-5
Project Number:	10044334006
SCALE:	1" = 40'

JRL	AJB	AJB	10.06.25
Dwn.	Chkd.	Dsgn.	MM.DD.YY

Drawing No. C74

Revision 0 Sheet 74 of 80

THE OFFICIAL RECORD OF THIS SHEET IS THE ELECTRONIC FILE INITIALLY SIGNED AND SEALED UNDER RULE 61G15-23.004, F.A.C.

P:\Manatee_Co_Port_Auth\10044334006_GC_South_Dock_Street\SigningAndMarking\PLANSP01.dgn : PLANSP01
ByrdA 6/15/2026 12:00:05 PM
ORIGINAL SHEET • ANSI B

EXHIBIT B

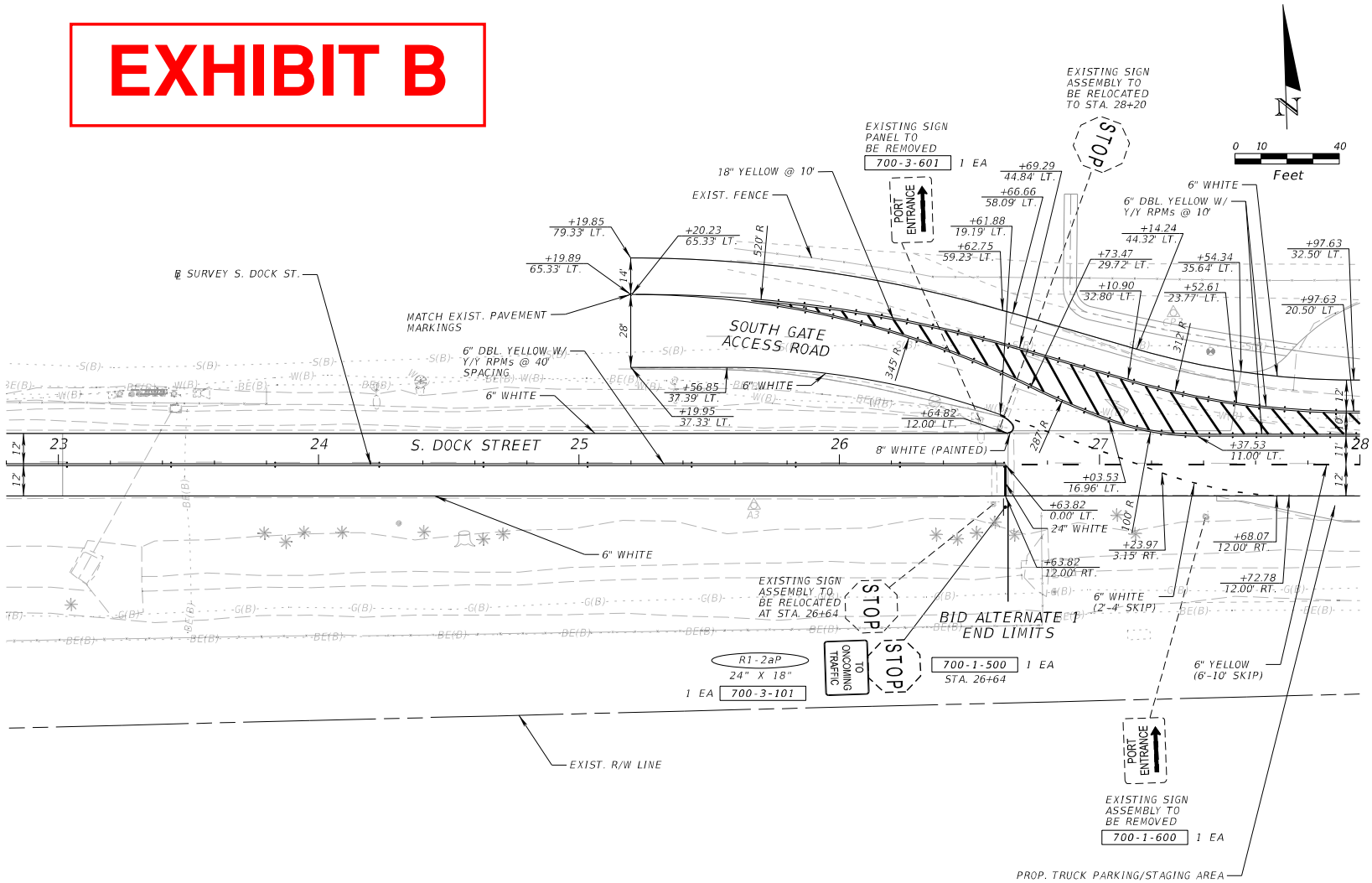

BID PLANS
14 MAY 2026

SEAPORT Manatee

Client/Project
SEAPORT MANATEE
SOUTH DOCK STREET PAVING
MANATEE COUNTY, FLORIDA
SIGNING AND PAVEMENT MARKING PLAN

RS&H
RS&H, INC.
1715 N. WESTSHORE BLVD
SUITE 600
TAMPA, FL 33607
813-289-5550

Permit-Seal

MCPA Project Number:	ITB-20260127-5
Project Number:	10044334006
SCALE:	1" = 40'

JRL	AJB	AJB	10.06.25
Dwn.	Chkd.	Dsgn.	MM.DD.YY

Drawing No. C75

Revision 0 Sheet 75 of 80

THE OFFICIAL RECORD OF THIS SHEET IS THE ELECTRONIC FILE INITIALLY SIGNED AND SEALED UNDER RULE 61G15-23.004, F.A.C.

P:\Manatee_Co_Port_Auth\10044334006_GC_South_Dock_Street\SigningAndMarking\PLANSP02.dgn : PLANSP02
ByrdA 6/15/2026 12:00:06 PM

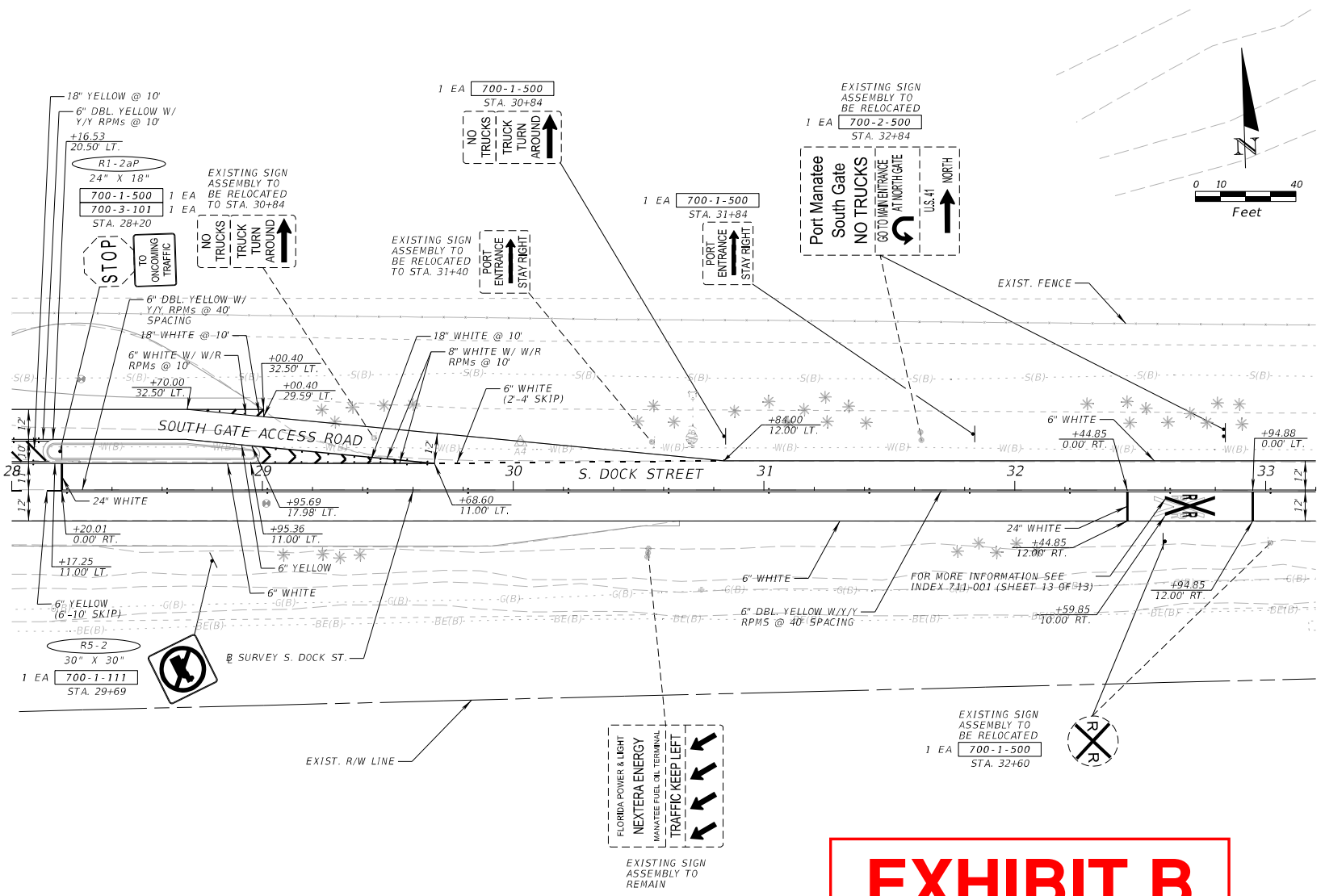

EXHIBIT B

BID PLANS
14 MAY 2026

SEAPORT Manatee

Client/Project
SEAPORT MANATEE
SOUTH DOCK STREET PAVING
MANATEE COUNTY, FLORIDA

SIGNING AND PAVEMENT MARKING PLAN

RS&H

RS&H, INC.
1715 N. WESTSHORE BLVD
SUITE 600
TAMPA, FL 33607
813-289-5550

Permit-Seal

MCPA Project Number:	ITB-20260127-5
Project Number:	10044334006
SCALE:	1" = 40'

JEL	AJB	AJB	10.06.25
Dwn.	Chkd.	Dsgn.	MM.DD.YY

Drawing No. C76

Revision	Sheet
0	76 of 80

THE OFFICIAL RECORD OF THIS SHEET IS THE ELECTRONIC FILE INITIALLY SIGNED AND SEALED UNDER RULE 61G15-23.004, F.A.C.

P:\Manatee_Co_Port_Auth\10044334006_GC_South_Dock_Street\Roadway\PLANSP03.dgn : PLANSP03
ByrdA 6/15/2026 12:00:09 PM

EXHIBIT B

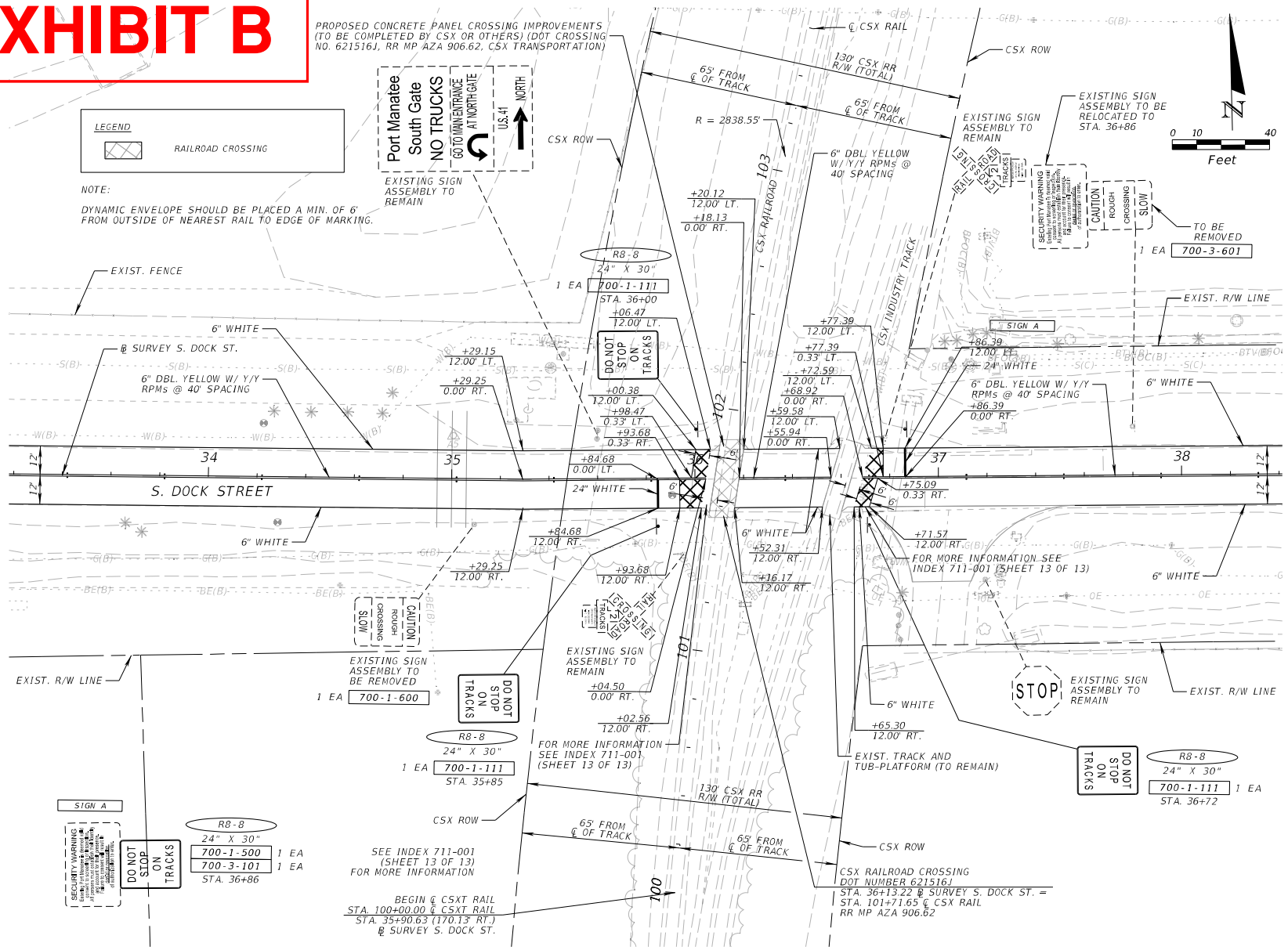

BID PLANS
14 MAY 2026

SEAPORT Manatee
The Agency for Business

RS&H
RS&H, INC.
SUITE 600
TAMPA, FL 33607
813-289-5550

Client/Project
SEAPORT MANATEE
SOUTH DOCK STREET PAVING
MANATEE COUNTY, FLORIDA
SIGNING AND PAVEMENT MARKING PLAN

Revision

Permit-Seal

MCPA Project Number: ITB-20260127-5
Project Number: 10044334006
SCALE: 1" = 40'

JJG	AJB	AJB	10.06.25
Dwn.	Chkd.	Dsgn.	MM.DD.YY

Drawing No. C77

Revision	Sheet
0	77 of 80

THE OFFICIAL RECORD OF THIS SHEET IS THE ELECTRONIC FILE SIGNED AND SEALED UNDER RULE 61G15-23.004, F.A.C.

P:\Manatee_Co_Port_Auth\10044334006_Gtr_South_Dock_StreetRoadway\PLANS\P04.dgn - PLANSP04
6/15/2026 12:56:11 PM
By:eIA

ORIGINAL DRFT? • INTER

EXHIBIT B

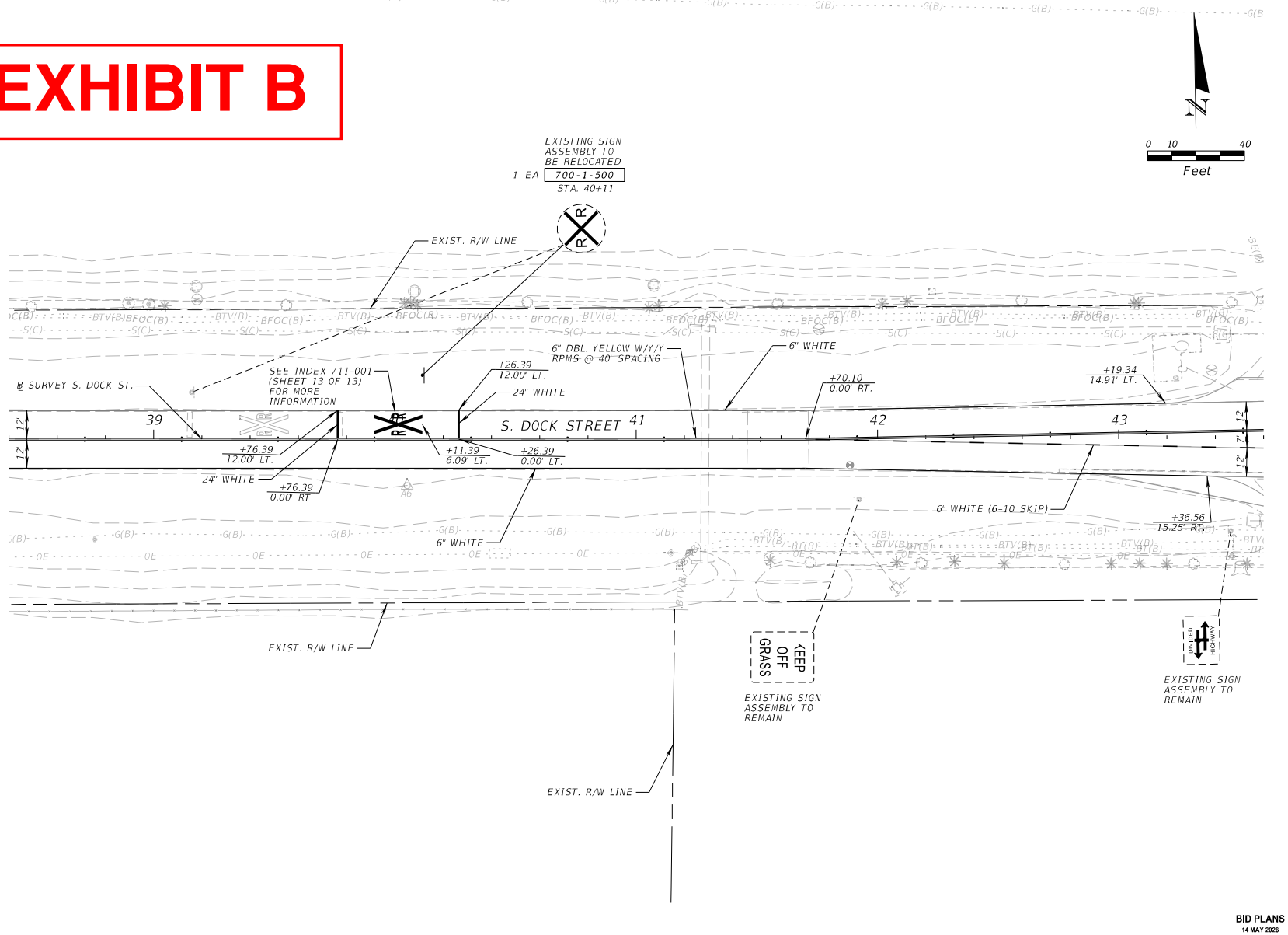

BID PLANS
14 MAY 2026

SEAPORT Manatee

Client/Project
SEAPORT MANATEE
SOUTH DOCK STREET PAVING
MANATEE COUNTY, FLORIDA
SIGNING AND PAVEMENT MARKING PLAN

RS&H
RS&H, INC.
1715 N. WESTSHORE BLVD
SUITE 600
TAMPA, FL 33607
813-289-5550

Permit-Seal

MCPA Project Number:	ITB-20260127-5
Project Number:	10044334006
SCALE:	1" = 40'

JRL	AJB	AJB	10.06.25
Dwn.	Chkd.	Dsgn.	MM.DD.YY

Drawing No. C78

Revision	Sheet
0	78 of 80

THE OFFICIAL RECORD OF THIS SHEET IS THE ELECTRONIC FILE INITIALLY SIGNED AND SEALED UNDER RULE 61G15-23.004, F.A.C.

P:\Manatee_Co_Port_Auth\10044334006_GC_South_Dock_Street\Roadway\PLANSP05.dgn : PLANSP05
ByrdA 6/15/2026 12:00:13 PM

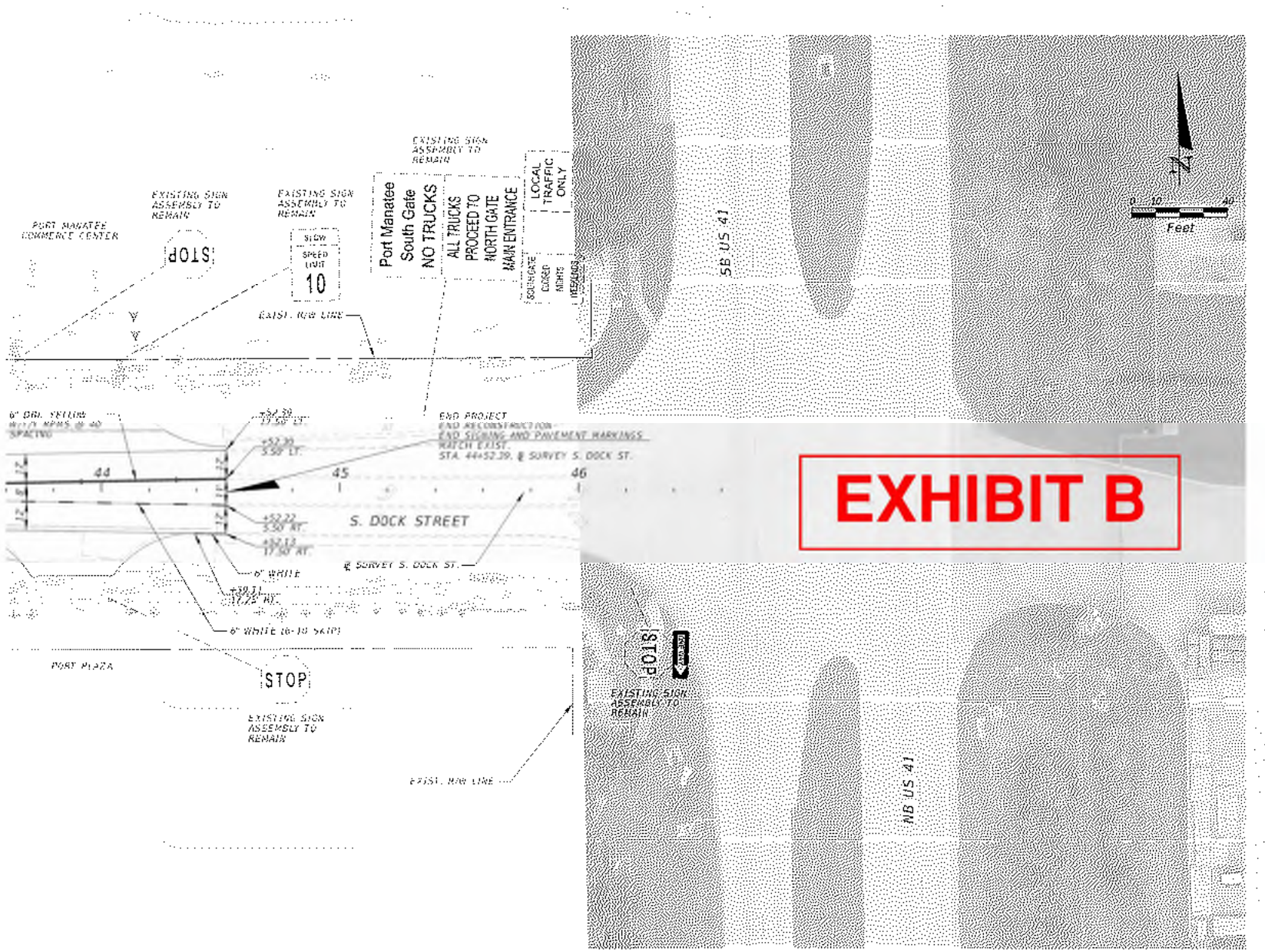

BID PLANS
14 MAY 2026

SEAPORT Manatee
The region lives on Tampa Bay

MANATEE COUNTY PORT AUTHORITY
300 JAMES RAY WAY, SUITE 1
PALMETTO, FL 34221

Client Project
SEAPORT MANATEE
SOUTH DOCK STREET PAVING
MANATEE COUNTY, FLORIDA

SIGNING AND PAVEMENT MARKING PLAN

RS&H
RS&H, INC.
1715 N. WESTSHORE BLVD
SUITE 600
TAMPA, FL 33607

Florida Seal

Drawing No. C-79
Revision
Sheet
79 of 86

THE ORIGINAL RECORD OF THIS SHEET IS THE ELECTRONIC FILE DIGITALLY SIGNED AND SEALED UNDER RULE 61G15-23.004, F.A.C.

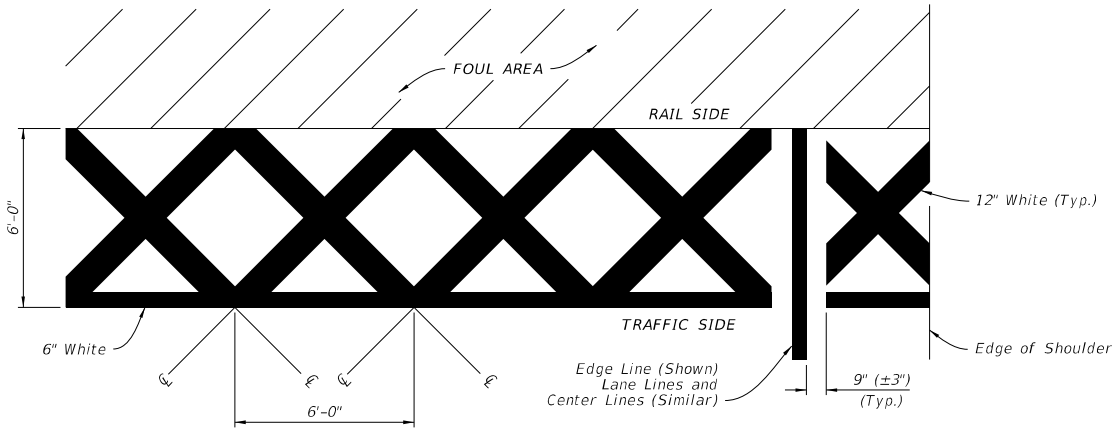

RAILROAD DYNAMIC ENVELOPE (RDE) PAVEMENT MARKING DETAIL
STANDARD PLANS INDEX 711-001-1

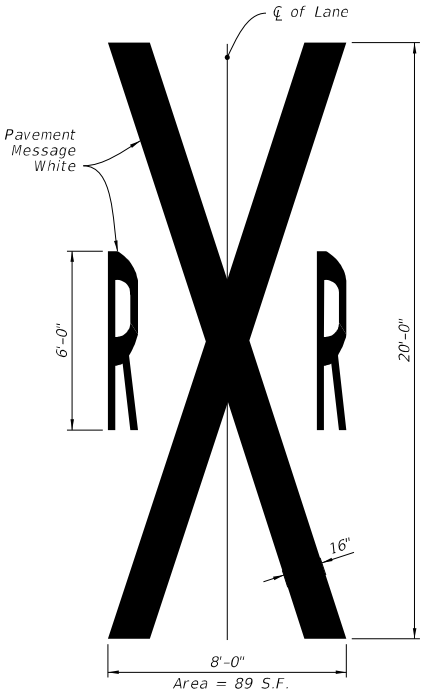

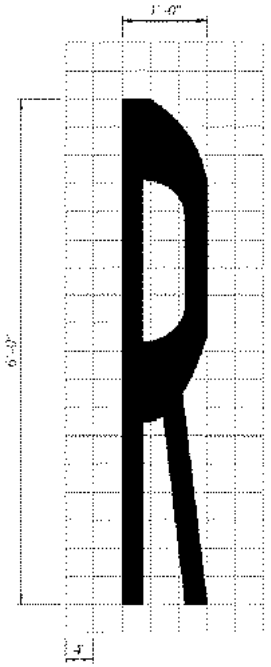

RAILROAD CROSSING PAVEMENT MESSAGE
STANDARD PLANS INDEX 711-001-1

EXHIBIT B

BID PLANS
14 MAY 2026

SEAPORT Manatee
The Tampa Bay Port

MANATEE COUNTY PORT AUTHORITY
300 TAMPA BAY WAY, SUITE 1
PALMETTO, FL 34221

Revision	By	Appd.	MM/DD/YY

Client/Project
SEAPORT MANATEE
SOUTH DOCK STREET PAVING
MANATEE COUNTY, FLORIDA

SPECIAL DETAILS

RS&H

RS&H, INC.
1715 N. WESTSHORE BLVD.
SUITE 600
TAMPA, FL 33607
813-289-5550

Permit-Seal

MCPA Project Number:	ITB-20260127-5
Project Number:	10044334006
SCALE:	N/A

SNM	AJB	AJB	03.12.25
Dwn.	Chkd.	Dsgn.	MM.DD.YY

Drawing No. C80

Revision	Sheet
0	80 of 80

THE OFFICIAL RECORD OF THIS SHEET IS THE ELECTRONIC FILE DIGITALLY SIGNED AND SEALED UNDER RULE 61G15-23.004, F.A.C.

P:\Manatee_Co_Port_Auth\10044334006_GC_South_Dock_Street\Cell\Sheets.cel : ROADWAY SHEET BORDER INFORMATION - PORT MANATEE
ByrdA 6/15/2026 12:00:40 PM

ORIGINAL SHEET - 8X11B

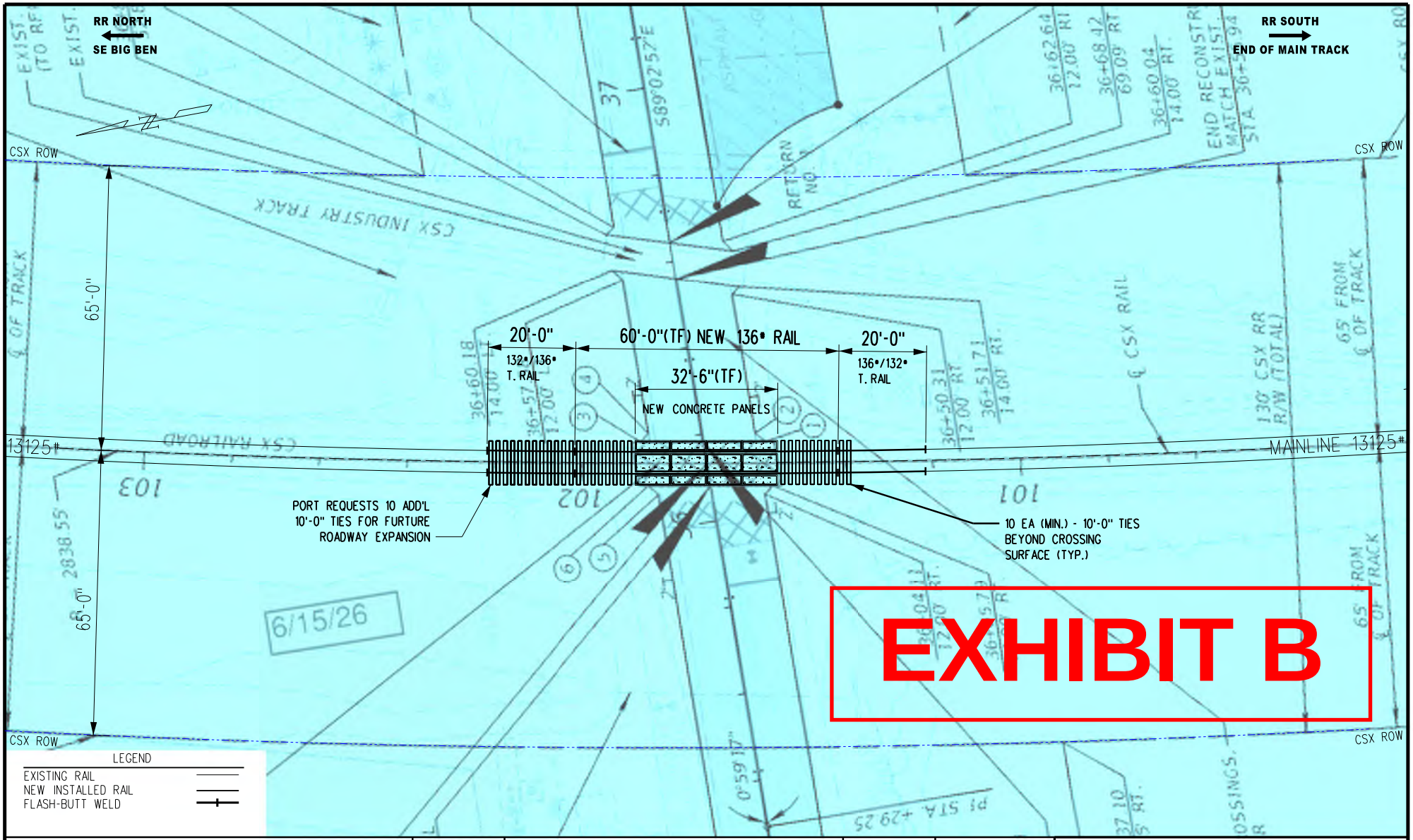

NOTES:
1. FINAL ROADWAY PLANS (5/15/26) SHOWN
2. ALL ROADWAY WORK TO BE DONE BY PORT
3. INDUSTRY TRACK TO BE LEFT UNDISTURBED

CSX TRANSPORTATION, INC.
ENGINEERING DEPARTMENT
DESIGN & CONSTRUCTION
JACKSONVILLE, FLORIDA

NTS

benesch
Benesch & Company
225 Water Street, Suite 1510
Jacksonville, FL 32202

RR ANGLE	100°
RR MP.	AZA 906.62
TRACK ALIGN	CURVED
DATE	06/23/2026
OP NO.	FL3234
DOT NO.	621516J
GLOBAL POSITION	27.630972 -82.5431469

NOT FOR CONSTRUCTION, MATERIAL PURPOSES ONLY

S. DOCK STREET
DIV: FLORIDA SUB: PALMETTO
PALMETTO, MANATEE COUNTY, FL

7. CSX Construction Agreement & Adopt Budget Resolution PA-27-03

SEAPORT Manatee
The *right* turn on Tampa Bay

South Dock Street Resurfacing Project

- Previously approved Engineering and Construction funded 100% by FL Commerce grant of $2,000,000.00
- Request to execute CSXT, Inc. Construction Agreement for $247,671.00
- Request Budget Resolution PA-27-03 for $195,000.00

RECOMMENDATION:

- Move to approve and authorize the Chairman to execute the contract between the MCPA and CSXT, Inc. for $274,671.00 for the South Dock Street Project.
- Move to adopt Budget Resolution PA-27-03.